LED DESIGN PRIMER

Principles of LED Design

Pulse Width Modulation Controls

Image Processing Design Considerations

Flash Module Array Control Systems & V-Commerce

V1.0 | WWW.ONEWORLDLED.COM | Copyright © 2014 - 2015

ONE WORLD LED

LED DESIGN, MANUFACTURE & WHOLESALE

LED SCREEN DESIGN PRIMER

Schumann Rafizadeh (One World), Masashi Nogowa (TI with EDN's permission), Kangbin Sun and Evan Wang (Macroblock) and Colorlight Tech Co. LTD

Introduction

LED-based display screens are bringing new dimensions of versatility, attraction and eye-catching visual effects to a growing number of outdoor and indoor applications. Recent advances in LED display screen technologies have even made it difficult to distinguish still images on their high-quality displays from traditional printed or painted billboards. This primer takes a detailed look at the essential technical principles of LED display systems incorporating Flash Module Array Systems architecture of One World and the engineering considerations required to design those using arrays of discrete LED lamps by Texas Instrument and advanced ES-PWM drivers such as Macroblock's and control systems of Colorlight.

Science and Technology Museum
Diameter: 1.2m P5 indoor display

Youth Activity Center
Diameter: 2.5m P7.62 indoor display

An international exhibition
Diameter: 2.5m P7 indoor display

Hi-Tech Fair
Diameter: 1.2m P5 indoor display

Earth display in Beijing
Diameter: 3m P6 indoor display

Outdoor advertising raster display
Diameter: 50m Area: 2700 sqm

Spherical LED Screen Design – Courtesy Colorlight Pty, LTD

LED driving basics

First we will compare the various LED driving circuitries to determine the best method.

Connecting a voltage source
It is well known that an LED lamp (or diode) starts turning ON with enough forward voltage (VF). When ON its forward current emits light. From this basic knowledge, one can come up with the first option in Figure 1a but it will not work. Because an LED current is an exponential function of its voltage bias (equation 1), light intensity from the LED lamp is very sensitive to the voltage. In most cases the high current condition turns the normally long-lived LED into a very expensive flash bulb

$$I_{LED} = I_S\left(e^{(V_F - R_S \times I_{LED})/V_T} - 1\right) \quad \text{(eq 1)}$$

Here's why Figure 1a will not work. In equation 1, IS, RS is a constant, depending on the LED product, and whether VT is the thermal voltage. Assuming a series resistance RS is ideal and zero, only 0.1V of VF change makes 47 times difference in I_{LED}.

$$\frac{I_S\left(e^{(V_F+0.1)/V_T}-1\right)}{I_S\left(e^{(V_F)/V_T}-1\right)} \approx \frac{e^{(V_F+0.1)/V_T}}{e^{(V_F)/V_T}} = e^{0.1/V_T} \approx 46.8 \quad \text{(eq 2)}$$

For example, a target LED current value 20 mA jumps up to 1A with only 0.1V difference of its bias current. Even taking into account a realistic RS value, a real LED device still shows 10 to 20 times difference with a 0.1V bias difference.

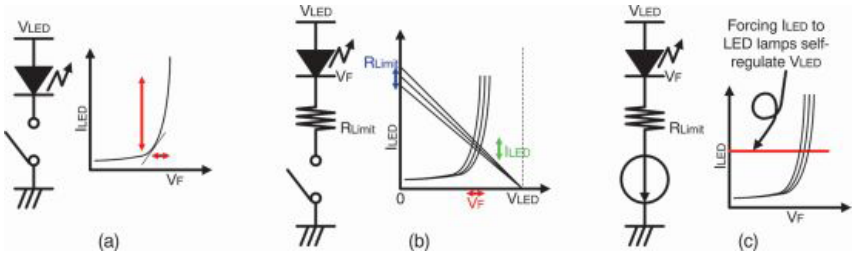

Figure 1. Comparing three LED driver circuits

Voltage source with current limit resistor
Now let's examine Figure 1b. A current limit resistor RLIMIT is added to protect an LED lamp. Because of the limit resistor, the lamp does not blow up. Still, it is not great at controlling LED light intensity in video display applications. An LED curve and a load curve by RLIMIT determine its LED current value. As shown in red or blue annotations, this LED and resistor has variations of forward voltage and resistance from manufacturing errors. These error factors change the LED current (green) at non-negligible levels.

Constant current source
Figure 1c employs a constant current circuitry instead of resistors. This constant current driver circuit regulates an LED current directly at the target value. The LED conducts a certain value, no matter how much VF variation the LED lamp has from its manufacturing process. Because the light intensity of an LED lamp is strongly tied to charges crossing its PN junction, this constant current driver method is ideal to get uniform light output from LED lamps.

Furthermore, it is well known that an integrated circuit (IC) provides good matching circuit pairs. This is another benefit of selecting a constant-current method. Figure 2 shows a basic output stage structure of LED drivers. Many LED driver ICs in the market have a reference current setting terminal IREF, and this reference current is constant-current-mirrored to its output terminals.

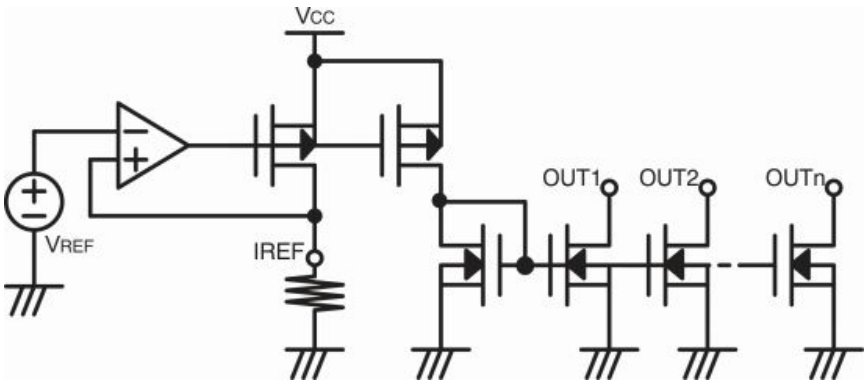

Figure 2. A basic LED driver IC output configuration

Figure 2 illustrates the results of this discussion, a basic output circuitry configuration of LED drivers.

Driving Color LED

By combining varying shades of light's three primary colors, red, green and blue (RGB), any color can be generated. A familiar example is a color selection tool on a personal computer (PC).

Gray scale control by digital or analog

A PC's operating system blends three colors in 256 steps (8 binary bits each) or more to display a full color pixel. For the LED display system, the same concept of step color intensity control is needed. The goal is to achieve step control, or gray scale control in LED driver design.
Your first decision should be whether to use digital or analog control. As explained earlier, the total charge count crossing a PN junction determines light intensity, so both digital and analog methods can control the light intensity. Figure 3 illustrates 50 percent gray scale control in digital and analog methods. In a total 256-step example, this 50 percent indicates a 128 gray scale target.

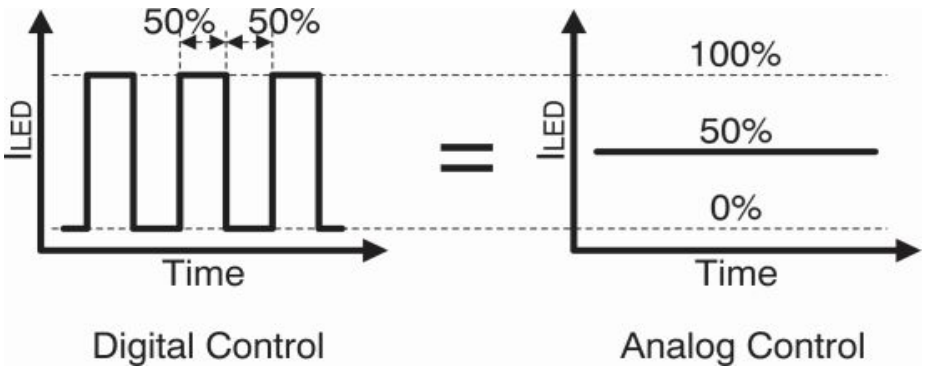

Figure 3. Fifty percent intensity control in digital and analog

LED current and color change

At this point, the effects of current change on the wavelength value of LED light output needs to be considered. A changing wavelength means changing color to the human eye. Figure 4 shows a green color LED lamp example. Usually, 510 nm widely represents green in the industry. Thus, most LED lamp manufacturers design a lamp to have 510 nm at maximum-rated current of LED lamp products. In Figure 4, the wavelength reaches 510 nm as the LED current rises. The best way to get green color is to always drive a lamp as close to its maximum rated current as possible. This explains why using digital control is better than analog control.

Another benefit of choosing digital control is the ease of implementing the control on LED driver ICs as a digital circuit block. For a gray scale control over a 256 step range, digital control costs less than analog control.

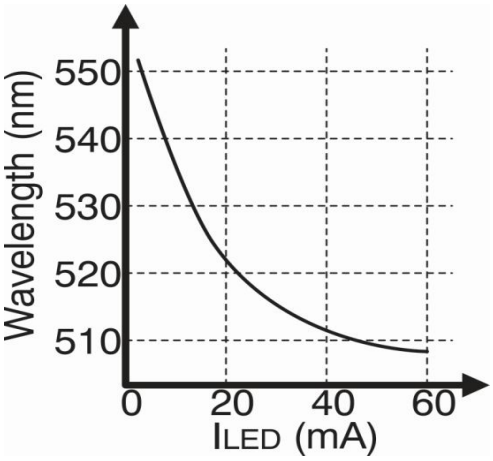

Figure 4. A green LED current vs. wavelength example

This ON/OFF digital control is known as a pulse-width modulation (PWM) control, or PWM dimming. Now PWM control switches are added to Figure 2.

How to form a matrix or 2D image

RGB LED lamps are tiled to form a 2-dimensional (2D) image.

Structure of display systems

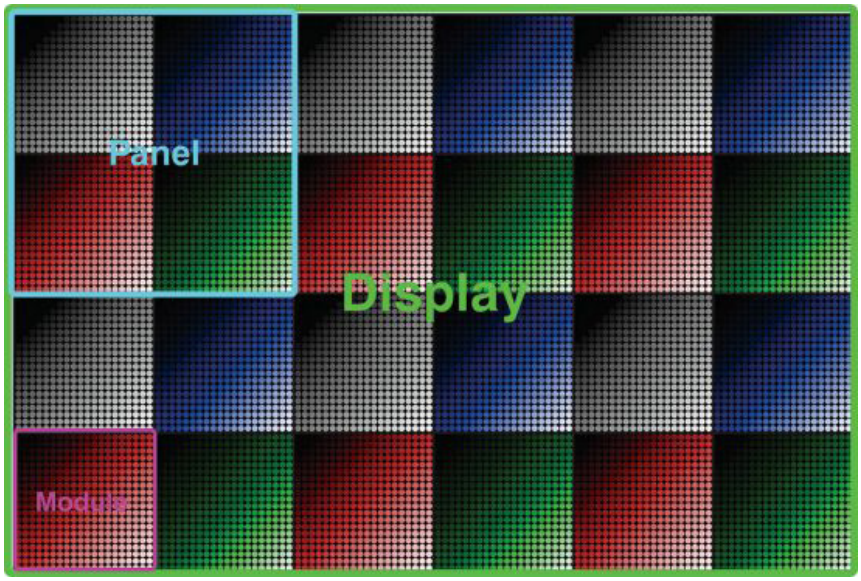

Figure 5. LED display system consists of module / panel / display

RGB LED lamps are arranged to form a square-shaped base structure, or module. It usually consists of one PCB with a pixel array of 16 X 16 to 64 X 64, depending on applications. Multiple modules are combined to form a mechanical and system structure, or panel. LED display system vendors usually provide panels. Each panel has a mechanical frame to hold multiple modules. It contains one or more Flash Module Array System controllers (control units also referred to as receiving cards) to provide a power distribution, data interface and processor for mapping of the data and image pixels. At a display system building site, such as stadium screens or road side billboards, multiple panels are installed to form a final display. At the construction site, all the data and power cables from each panel are routed to central control units.

Pixel pitch

One LED display system comprises a huge number of LED lamps and a large power supply. Optimizing LED lamp density is a key item to consider when designing a system. This density of LED lamps is discussed as a distance of each pixel, or pixel pitch. If the pixel pitch is too tight, it won't improve image output quality once it is finer than the human eye can detect, and adds to the cost. The human eye can distinguish two individual light sources when these two points form 1/60 of one arc degree (= one minute of arc).

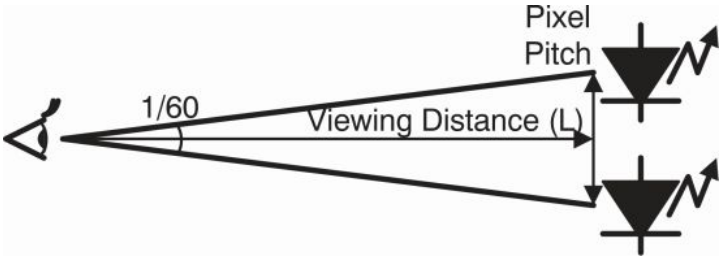

Figure 6. The ability of the human eye to detect resolution

Figure 6 illustrates how the human eye distinguishes pixel pitch DPP1 is calculated in equation 3 where L is a viewing distance.

$$D_{PP1} \approx 2 \times L \times \sin\left({}^{1}/_{60} \times {}^{1}/_{2}\right) = L \times 0.29e^{-3} \qquad \text{(eq 3)}$$

In best practice, DPP1 is considered overkill in that roughly three times of D_{PP1} is good enough for a good quality video system. D_{PP} is the guideline in equation 4.

$$D_{PP} = D_{PP1} \times 3 \approx L \times 1e^{-3} \qquad \text{(eq 4)}$$

An easy way to remember equation 4 is this:

Required Pixel Pitch in millimeter (mm) = "Viewing distance in meter"(m)

For example, a system with a viewing distance of 5 m requires 5 mm of pixel pitch to achieve good resolution. Another visual example is shown in Figure 7, which illustrates how too low of a pixel pitch degrades the output image quality. The 12.5 mm pixel pitch image (top) looks rough, and is not discernable at close distance. However, the image starts to make sense when viewing it at arm's length, which is similar to viewing the 5 mm pixel-pitch image (bottom). This is a good example of the relationship between the viewing distance and pixel pitch.

A key factor in delivering an optimum image is the size of the LED light device relative to their separation distance. Because the various LED pitches can be designed with a number of LED components in different dimension, this can create gaps between LED pixels that become very pronounced and dominate the image and impact the picture quality. This is referred to as "Pixelation". For example, a 6 mm pixel module may be designed incorporating SMD2121, SMD3528, SMD3535 or SMD5050.

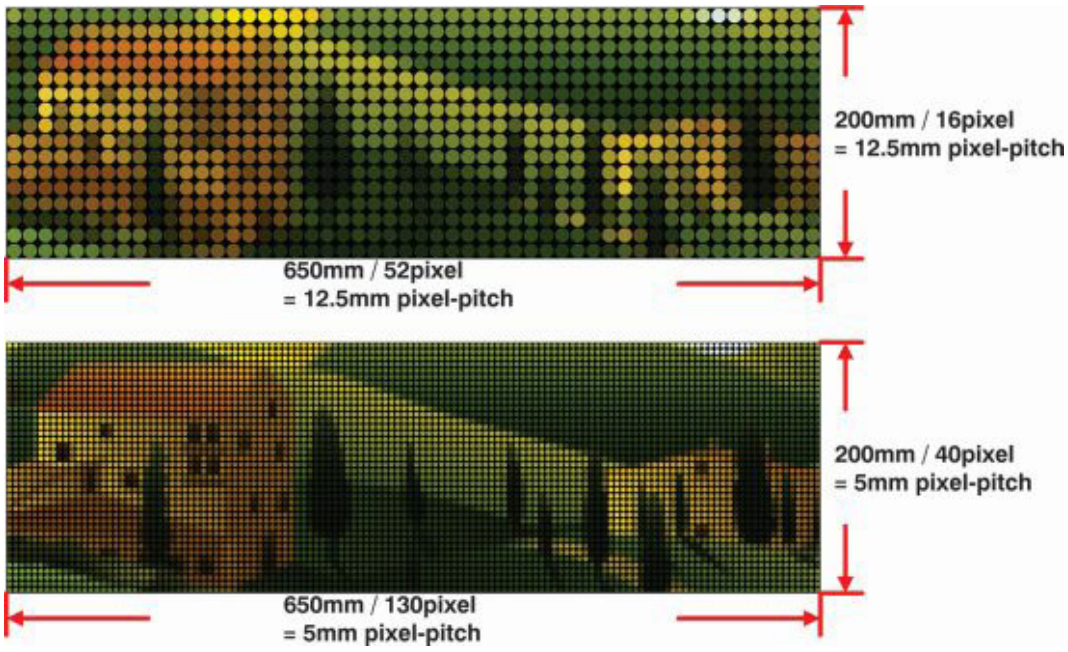

Figure 7. Comparison between different pixel pitch and viewing distance

Another factor in determining which components can create optimum picture is the LED screen "Facing Direction". For example, for geographical locations exposed to bright sun the SMD 3535 or SMD 5050 should be preferred to SMD 3528 or SMD 2828, especially for outdoor screens incorporating 5MM or larger pitch. Note the ratio of light surface versus pitch area. For example in a P10 LED (10mmX10mm) pitch area is 100 square mm while the surface area of 2828 (2.8mmX2.8mm) is 7.84squar mm compared to SMD 5050 (.5mmX.5mm) which is 25 square mm. This means the Shine Ratio (light surface to pitch area) ratio of 8% for SMD2828 compared to 25% for SMD5050 in P10 (Pitch 10mm) configuration. SMD 2828 P10 screen will be 3 times more pixelated than SMD 5050. See Figure 8 for the relative SMD component sizes below.

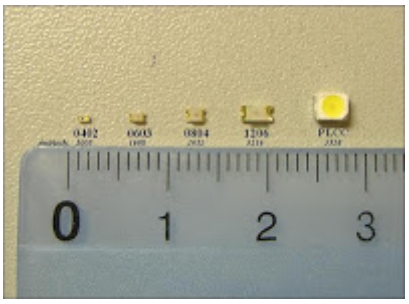

Figure 8. Comparison of Different SMD Component Sizes

Static drive and time multiplexing drive

From Figure 2, the cathode side of LED lamps is driven by LED driver ICs common in today's market. Here, drive circuitry for the anode side of LED lamps is reviewed. With the benefit of employing constant-current drive at the cathode side, the anode side is expected to supply just enough voltage. Still, an important decision is needed: how to drive the anode side!

Figure 9 compares static and time-multiplexing anode drive systems. The static anode drive configuration is very straightforward: one LED driver IC drives one LED. When designing a system with a huge number of pixels, the static anode drive requires a huge number of LED driver ICs. In contrast, the time-multiplexing anode drive system uses fewer LED driver ICs by sharing one IC with multiple LED lamps. A tradeoff with the time-multiplexing drive is that output LED light intensity is reduced due to time-sharing.

In outdoor display systems, very strong LED output is required to overcome the brightness of the sun in order to deliver the image to the human eye. In such outdoor systems, the static anode drive is preferable. On the other hand, in indoor systems, the time-multiplexing anode drive is a good method to reduce system building cost. For the outdoor LED screens the DIP and 3-in-1 DIP are preferable to SMD. However, for most applications where the outdoor screen is backed to the sun SMD provides acceptable solutions. However, for partial sun the brighter and more expensive components such as SMD 3535 for higher pixel resolutions to provide longer viewing range is must.

Since time-multiplexing has become the most commonly-used technique in today's applications, we'll use it for the applications we discuss in the remainder of this document.

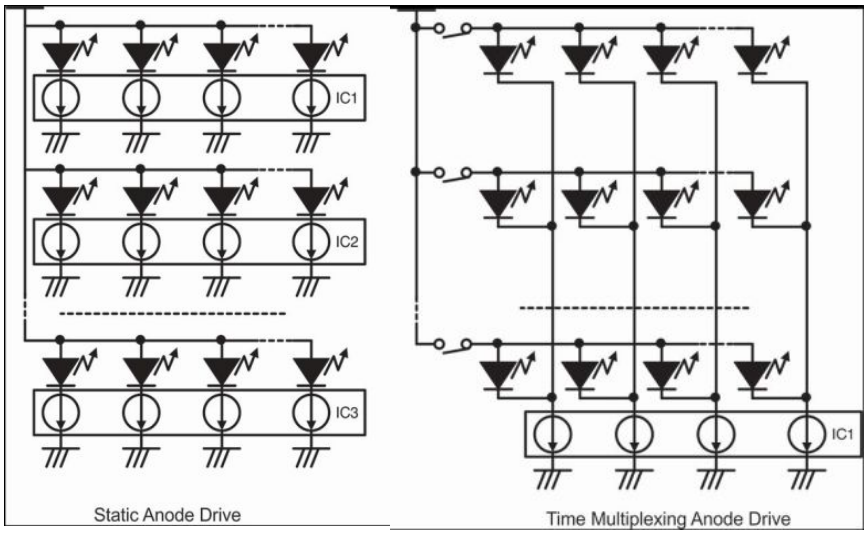

Figure 9. Static and time-multiplexing anode drive

How to create movie / video images

Earlier we discussed how to display a still image. If we keep changing that still image, we can turn it into a movie or video.

Frame rate / frame refresh rate

Old analog TV systems used to show 24 different still images in one second, for a frame rate of 24. When an analog TV camera views another analog TV screen, it creates a zebra mix comprising video images and black bands (Figure 10). This is caused by the synchronized TV camera and TV screen scanning rate. The same problem occurs when a camera taking a shot of an LED screen uses the time-multiplexing anode drive. Examples include a TV camera capturing an image of a concert stage with an LED display enlarging a performer on the back wall, or a TV camera or mobile camera viewing a stadium score/display panel at a sport event. To avoid this issue, LED displays today need to operate faster than camera systems, especially in a professional use LED display market.

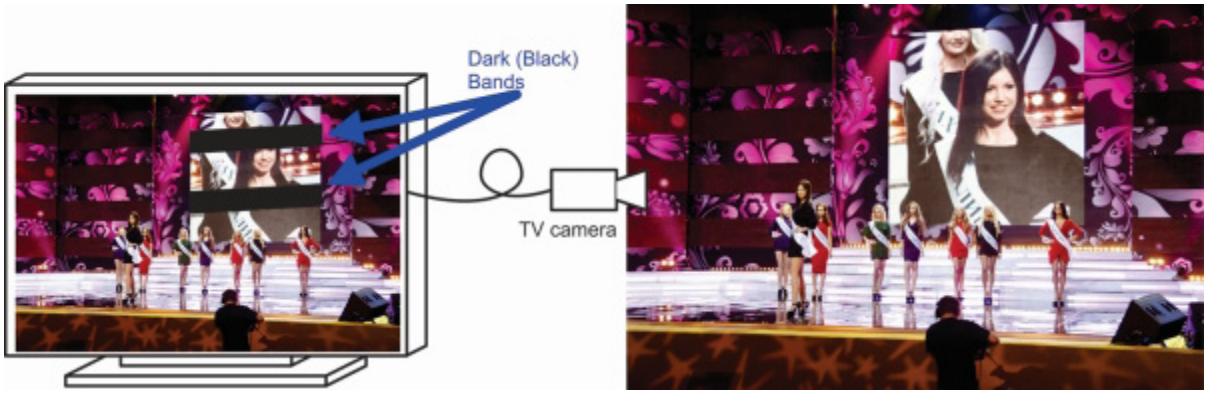

Figure 10. TV camera viewing another TV screen causing black bands

To meet this faster operation requirement, many LED display systems repeatedly show the same image within one frame period, known as the frame refresh rate. Figure 11 shows the relationship of the frame rate and refresh rate. There are only two frame images: A and B. Each frame repeats "image x" twice. Thus, this example is "Frame Refresh Rate" = 2 ×"Frame Rate".

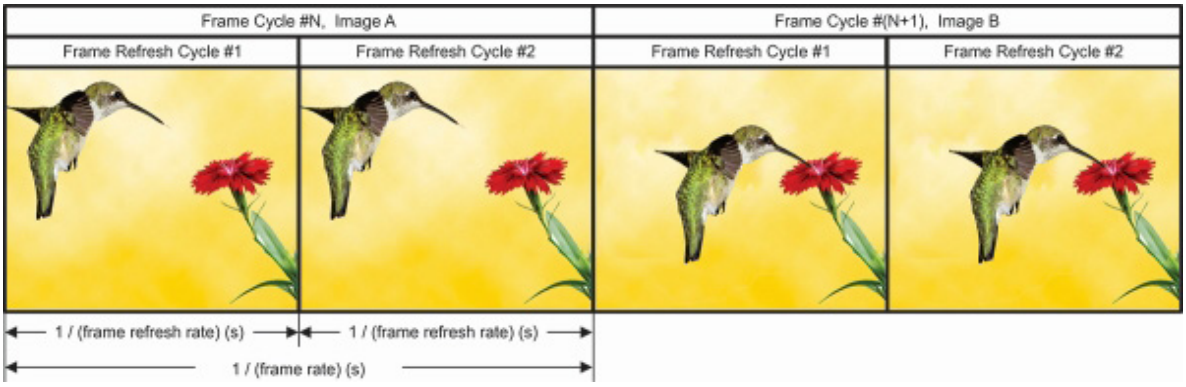

Figure 11. Frame rate and frame refresh rate

In a common LED display system, a frame rate is in the range of 50 Hz to 120 Hz, and a frame refresh rate is in the range of 50 Hz to 2 kHz. This problem can also be addresses with improved versions of PWM technology such as S-PWM (Scrambled PWM) and ES-PWM (Enhanced Spectrum PWM). Details of solving black Bands problem is covered in later discussions.

ON/OFF control driver or PWM control driver

To meet system requirements of frame rate and refresh rates, a decision needs to be made between two ways to implement the logic circuit. First is the ON/OFF control driver, and the second is the PWM control driver.

Figure 12a shows a system with an ON/OFF control IC, which has an ON/OFF register that corresponds with each bit to its output. A logic high of the register bit turns ON the corresponding output; a logic low turns it OFF.

Figure 12b shows a system with a PWM control IC, which has a gray scale reference clock input terminal that references the clock counter. Plus the IC has a set of registers that hold gray scale logic code. PWM comparators compare and generate PWM output patterns from the counter and gray scale (GS) register. For both types of driver ICs, two operations are performed in parallel:

- The constant current driver block drives its LED lamp array based on inputs from the current display cycle data.
- Meanwhile, the data for the next display cycle is received into the shift register.

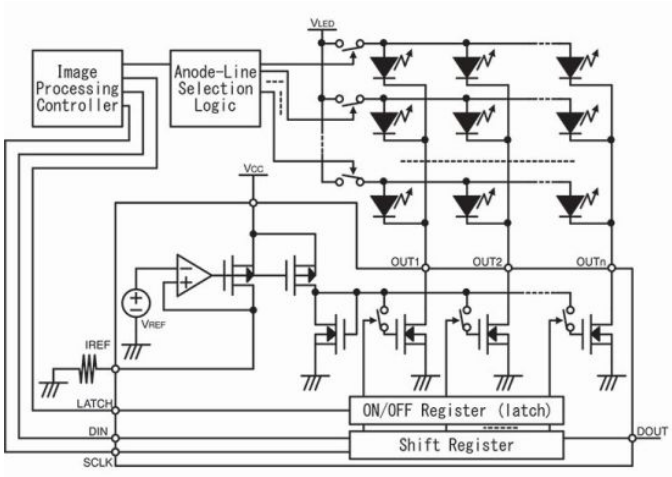

(a)

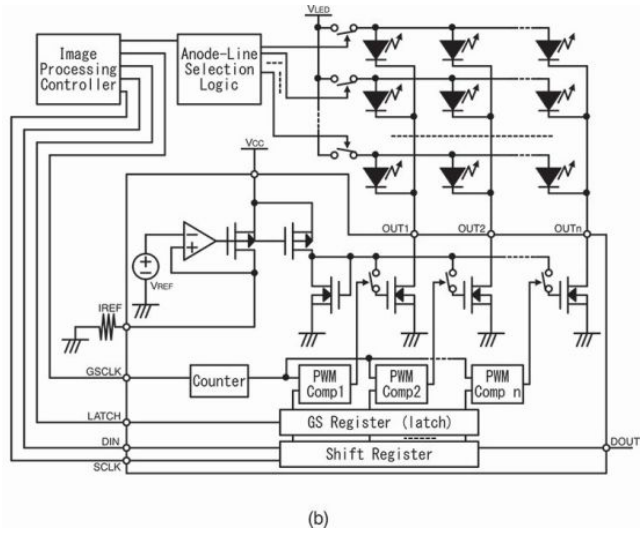

Figure 12. LED display with ON/OFF control IC and with PWM control IC

For future V-commerce applications of LED screens, it is critically important for the display screen to be able to display codes necessary for user interactions and transactions such as Dealcodes, Barcodes and Quick Response (QR) codes. These codes are intended to be scanned, captured or received by smart devices and mobile Apps using devices such as the digital cameras for direct purchase, inquiry or other user requirements. Some of the LED screen design requirements of such V-commerce applications are explained in more detail in the later sections along with various enhanced spectrum or scrambled PWM (explained in later sections) design considerations.

Another important consideration is the diode light components. The choice DIP or SMD components and their types can make a significant difference in the design and functional quality and performance of the LED display screen. For example, SMD 3528 RGB versus SMD 3535 RGB while similar in looks are two totally different components in functionality. Former with 4 solder pads (signal lines and a shared cathode) allows one LED (R, G or B) manipulation at a time while the latter with 6 signal lines allows each LED color to be manipulated independently, thus running much brighter, cooler and more stable. (Refer to each components specification data sheets for more details.)

Both the SMD and DIP components are available in many different size, shape and specifications. The ultimate required features of the LED display screens can often be met by a number of alternative designs and product specifications. However, in each case, only the correct evaluation of all the requirements can lead to the best possible solution and design.

Image Processing Design Considerations of LED Displays

LED signage and matrix displays are becoming a part of today's commercial landscape. The improved quality of LED display screens and declining prices are making utilization of these systems a viable replacement for traditional billboards and many other indoor and outdoor presentation applications. A key future application for the LED display screens is Virtual Commerce which is briefly covered as it relates to the design factors for displaying Dealcodes.

How to transfer display data

To begin, let's review how data is transferred between the image processing controller and the LED driver ICs. Table 1 lists the design specifications of the example application we'll be working with in this section.

Parameter	Symbol	Value
Frame Rate	FR	50 Hz = 20 ms
Frame Refresh Rate	FRR	200 Hz = 5 ms
Number of LED Driver IC	N_{IC}	8 IC in cascade
Number of outputs per IC	N_{OUT}	16 output per IC
Number of Gray-scale	N_{GS}	12-bit gray-scale = 4096 steps

Table 1. Example specification

System with ON/OFF Driver IC

In a basic ON/OFF driver IC system, such as the example in Figure 11(a), an image processing controller must generate a pulse-width modulation (PWM) pattern map on its memory.
This pattern map consists of an ON/OFF status (bit) of each output managed by this controller per each gray scale PWM clock (Figure 13). The ON and OFF patterns of OUTN and OUTM are rendered for one entire frame period (5 ms), plus a few more clocks. Once the controller finishes rendering the memory map, the controller sends out the resulting pattern of logic-H and logic-L, (along with each red line) to the ON/OFF control of the LED drivers' shift register.

For this system, the data transfer rate $f_{DATA(ON/OFF)}$ is expressed in equation 1.

$$I_{LED} = I_S\left(e^{(V_F - R_S \times I_{LED})/V_T} - 1\right) \quad \text{(eq1)}$$

The parameters in Table 1, $_{fDATA(ON/OFF)}$, are calculated as 105 MHz. For large outdoor display systems, delivering 105 MHz logic signal on its PCB is neither practical nor realistic. Most LED driver ICs cannot receive 105 MHz logic inputs anyway. In Table 1, the ON/OFF control driver cannot meet the target specification. A realistic frame refresh rate (FRR) needs to be downgraded to 50 Hz. The result is $f_{DATA(ON/OFF)}$ = 26 MHz.

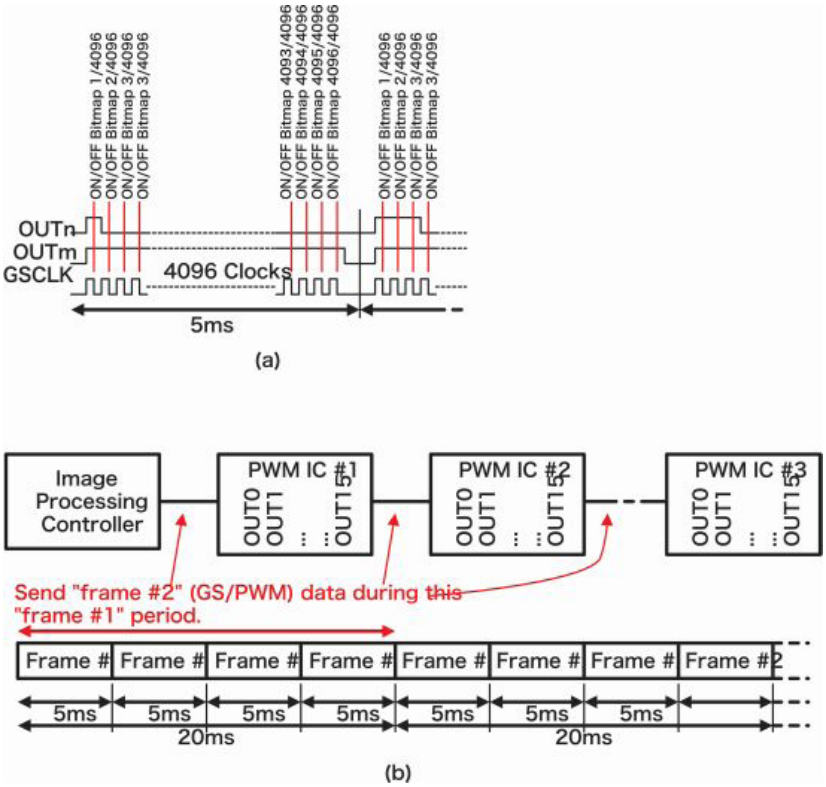

Figure 13. PWM data timing chart for ON/OFF and PWM drivers.

PWM driver IC system

In the PWM driver system discussed previously, there are two logic signal speeds (or frequency parameters) to consider. The first is a gray scale reference clock frequency fGSCLK(PWM):

$$f_{GSCLK(PWM)} = FRR \times N_{GS} \quad \text{(eq 2)}$$

Using the parameters in Table 1, fGSCLK(PWM) is calculated as 819 kHz, which is easy to achieve.

The second is a data transfer frequency fDATA(PWM):

$$f_{DATA(ON/OFF)} = FR \times N_{GS} \times N_{IC} \times N_{OUT} \quad \text{(eq 3)}$$

Based on Table 1, fDATA(PWM) is calculated as 26 MHz. Note that a PWM control driver IC can repeat the same image data without resending gray scale data and the frame rate (FR) used in equation 3, which is unlike using FRR in equation 1. Figure 2b shows a simplified diagram of how PWM control driver ICs can reduce the data transfer rate.

ON/OFF versus PWM Control Drivers

There are pros and cons when choosing between ON/OFF and PWM control drivers. The choice depends on your display system's needs. A generic comparison is listed in Table 2.

	ON/OFF control IC	PWM control IC
Pros	• Software provides very flexible control of the PWM output timing	• Less processor power needed • Less software development time needed • Easier to achieve faster frame refresh rate
Cons	• Requires lots of software programming • Tough to increase frame refresh rate	• PWM output timing is hard coded and less flexibility

Table 2: ON/OFF versus PWM control ICs

So far, a PWM control driver might look to be a better choice. Before you decide, however, let's consider an important benefit of the ON/OFF control driver. The image processing controller has the flexibility to generate PWM patterns for all outputs by its software. For example, the controller can achieve a unique spread-spectrum PWM pattern to avoid potential electromagnetic interference (EMI), or a special gamma-correction.

Driver ICs ca improve video image

Now, we review the various LED driver IC functions and how they can contribute or solve certain image processing and display problems for LED screens.

Dot correction

Because of various error factors, an LED display must be calibrated in order to present a uniform brightness profile across each of its LEDs. Figure 14 represents a non-calibrated display showing the entire white image data. The inconsistencies may be due to one or more possible error factors such as, but not limited to:

- Current-to-light conversion efficiency difference of each LED lamp
- Forward voltage difference of each LED lamp
- Driving current error of LED driver ICs
- Error of reference current setting resistor connected to LED driver ICs
- Light output loss caused by physical dimension error of LED lamps

A dot correction (DC) function has the ability to adjust driving current of individual output terminals by referring to several bits of digital data. Thus, a dot correction is like a set of current-output digital-to-analog converters (DACs). An example of a dot-corrected calibrated display is shown in Figure 3b.

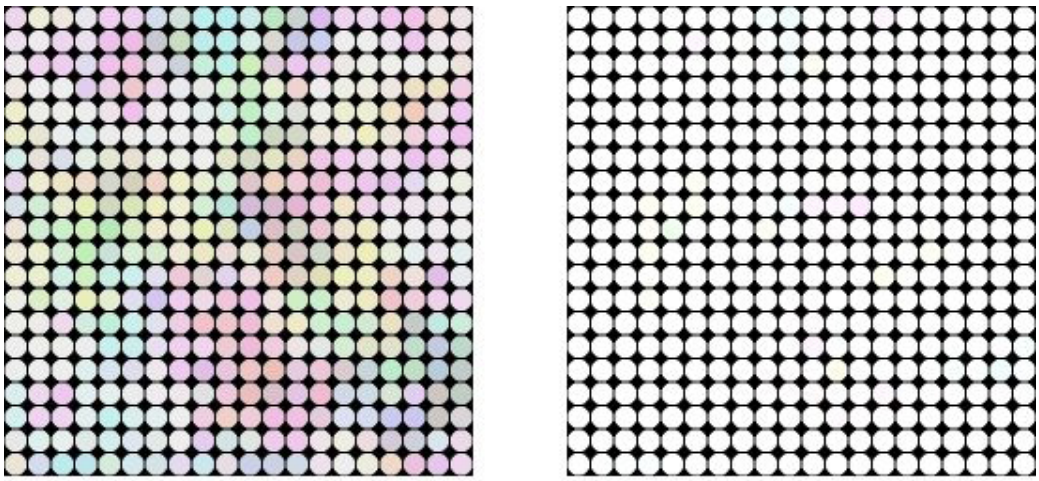

(a) (b)

Figure 14. Examples of un-calibrated image (right) and dot correction (left).

The schematic in Figure 15 depicts a circuit element which implements the dot correction function using DCx signals (highlighted in red text). More details are explained later.

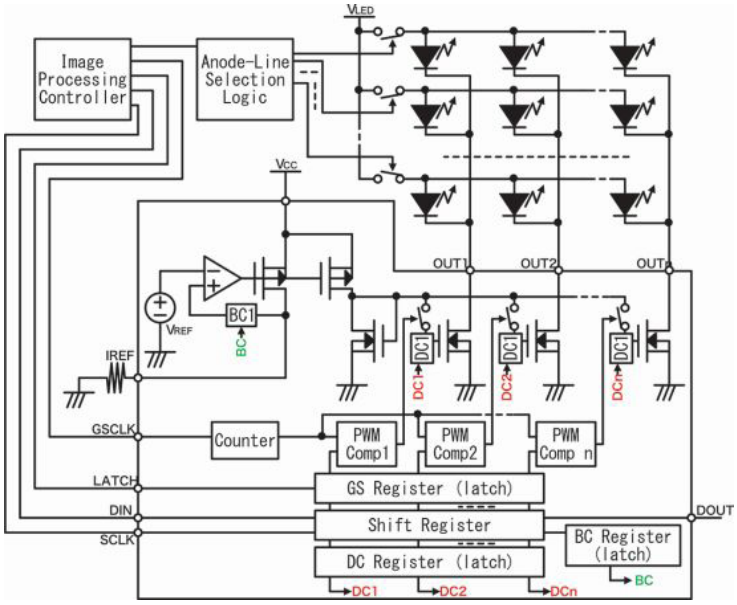

Figure 15. LED display with PWM control IC including dot correction and brightness control

In previous section, we showed that the LED current change shifts its output light wavelength (color). Because the dot correction function adjusts output current amplitude, a calibration attempt with a dot correction causes another smaller color shift. A best practice is to utilize visual inspection equipment which can digitize output color from a RGB lamp. Now, all lamps can be set to have the same target digitized value. Note that small pitch indoor, usually P6 or lower means that the SMD components may be sharing the same line for all three diodes share the Common Anode terminal.

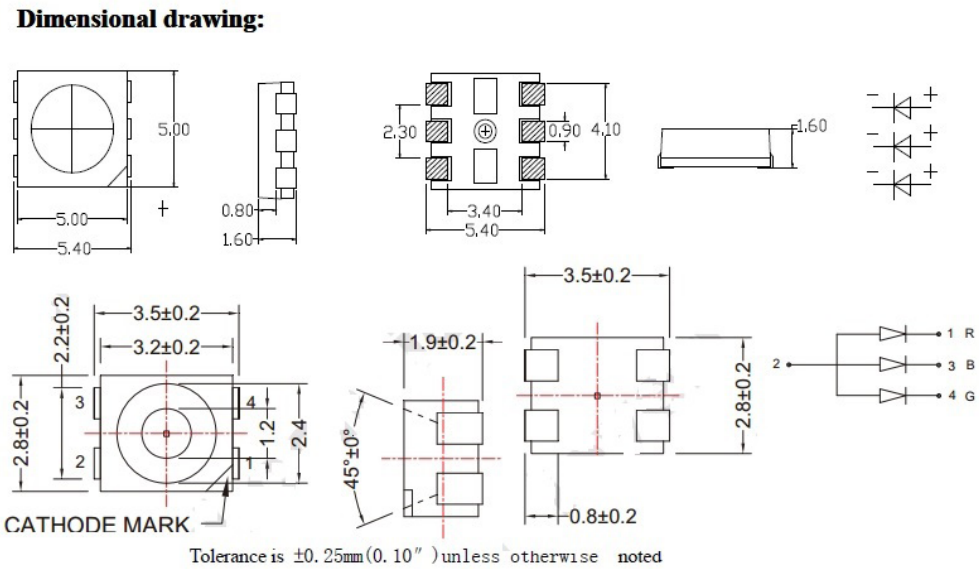

Figure 16. Typical SMD3535 Top versus SMD3528 LED Components Specifications

For P4 and higher the most commonly used SMD LED components are 3535 and 3528. These components are different in every aspect and depending on suppliers the costs for 3535 are normally 3 to 4 times higher than 3528. SMD3535 with independent Anode terminals allow control of all three LEDs while 3528 is one color at a time. This impacts the brightness significantly as 3535 can be more than 3 times brighter than its 3528 common anode RGB cousin. Figure 17 is a typical high quality luminous intensity chart for these two LED lamps.

* Typical Optical/ Electrical Characteristics

3528	Luminous Intensity (MCD)			Dominant Wavelength (λd/ nm)			Test Condition	Viewing Angle (Typ.)	Forward Voltage(V) (Typ.)
	Min.	Typ.	Max.	Min.	Typ.	Max.			
Blue	80	---	100	465	---	475	I_F = 20mA	120	3.1-3.3
Green	350	---	420	520	---	530	I_F = 20mA		3.1-3.3
Red	110	---	140	620	---	625	I_F = 20mA		1.9-2.1

* Typical Optical/ Electrical Characteristics

3535	Luminous Intensity (MCD)			Dominant Wavelength (λd/ nm)			Test Condition	Viewing Angle (Typ.)	Forward Voltage(V) (Typ.)
	Min.	Typ.	Max.	Min.	Typ.	Max.			
Red	600	700	800	620	---	625	I_F = 20mA	120	1.8-2.4
Green	1500	1700	2000	525	---	530	I_F = 20mA		3.0-3.4
Blue	300	400	600	465	---	470	I_F = 20mA		3.0-3.4

Figure 17. High Quality SMD 3528 vs. SMD3535 Luminous Chart

Brightness control

Brightness control (BC) is a similar function to dot correction adjusting output current amplitude. However the brightness control changes all IC outputs simultaneously.

Brightness control is an effective way to adjust whole display brightness. As with adjusting the brightness on your notebook PC, it depends on the ambient brightness. For example, an outdoor display system in bright daylight needs the highest light output to overcome the bright sunlight. However, the same outdoor system doesn't need near as much light output at night.

Figure 18. Example of brightness control

Figure 18 (above) shows how brightness settings can change the same image, depending on ambient brightness. Figure 18a is in a bright room while Figure 18b is in a dark room – but they both look the same to the human eye. Note: The BC signals which implement the brightness control function illustrated here are shown in the previous schematic (Figure 15), highlighted with green text.

Currently, most advanced LED display systems allow both software and hardware control of the brightness depending on ambient lighting. The hardware control is commonly accomplished by utilizing a light sensing circuit which in interfaced with the LED control system. An example of hardware brightness control system is Colorlight's multifunction card.

The software control system works both in real-time or pre-scheduled which relies on a system clock and schedules brightness according to (daytime) brightness during the day.

Image Quality Issues of LED Display Screens

This section covers some of the issues which affect the image quality and reliability of LED displays. We also discuss some of the technologies and design technique used to deal with them. These issues are associated with scanning rates used to handle high resolution LED designs.

Anti-ghosting / ghost-canceling / pre-charge FETs

Ghosting, spike noise, or phantom noise are unwanted lighting effects caused by Anode gate "float" which can occur in time-multiplexed LED driver. Since LED lamps (PN junction of diodes) have relatively high levels of capacitance, their residual charge can keep triggering capacitive charge transfers between the floating nodes. And every time there's forward electron flow through a PN junction.
The situation where this phenomenon is most is a diagonal line image. Figure 19b shows an example of so-called "ghosting" caused by anode float. Modern LED driver ICs employ so-called "pre-charge FET" circuits which eliminate these ghosting effects (Figure 19a). As explained earlier, the root cause of ghosting is stray charges on the LED's anode which forward-bias its PN junction and cause it to light at unwanted times. These pre-charge FETs are designed to insure the LED lamps remain reverse-biased and unlit except when the driver circuit is actually on.

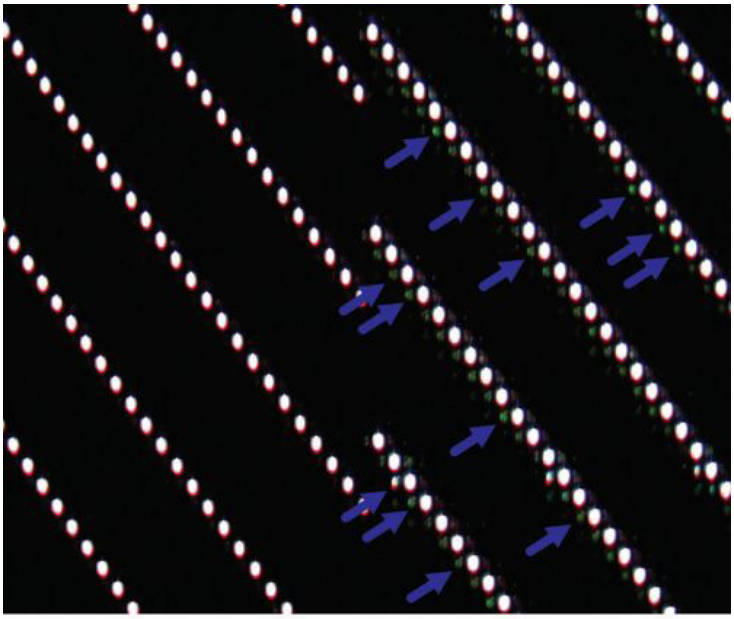

(a) TLC59283 (b) Traditional driver

Figure 19. Pre-charge FETs (left) and the ghosting (right)

A more detailed discussion of the various LED lighting effects and design considerations using Macroblock drivers follows.

Macroblock[1] designs address two typed of ghosting, "Upper" and "Lower" due to this parasitic capacitance effect. Macroblock's identified problems and preferred solutions are included here.

Upper Ghosting

A multiplexing design is shown in Figure 20. Usually, a slope pattern is used to test ghosting. The first turned on LED is LED1, and the next one is LED4. When the second row is switched on, there is a discharge path from Cpar1 to LED driver to make LED3 turned on. The phenomenon is so-called "upper ghosting".

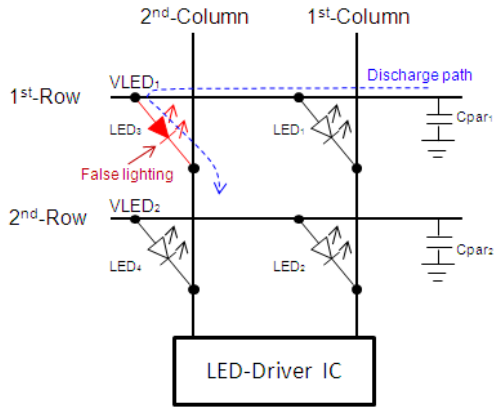

Figure 20. Upper Ghosting without Discharge Circuit

Creating another discharge path can eliminate the upper ghosting; that is, to form discharge circuits for row parasitic capacitors, Cpar1 and Cpar2, to discharge the parasitic charges before changing the scanning line. Figure 21 illustrates the proposed discharge path design.

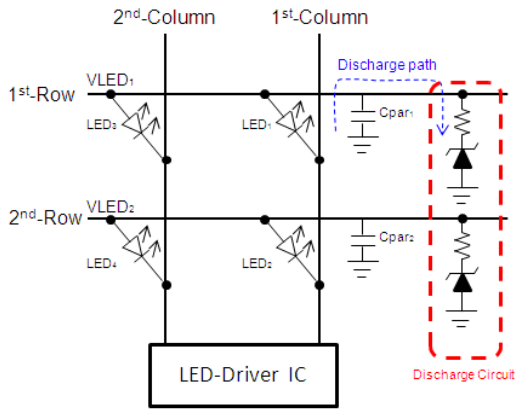

Figure 21. Discharge Circuit Design to Eliminate Upper Ghosting

The Lower Ghosting problem and solution are discussed next.

[1] "Challenges and Solutions of Full Color Indoor Led Displays", Kangbin Sun and Evan Wang, Macroblock 2013, infor@macroblock.com.tw is the original source of material included here.

Lower Ghosting

The same sequence of lighting LED as upper ghosting test pattern tests the lower ghosting. When the second row is switched on, there is a discharge path from VLED2 through Cpar2 to Ground to make LED2 turned on, too. The phoneme is so-called "lower ghosting". See Figure 22.

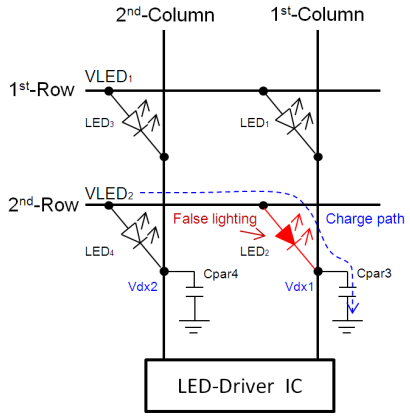

Figure 22. Lower Ghosting with LED Drivers without Pre-Charging

An LED driver integrates a pre-charge circuit to charge Cpar3, so that the increased column voltage (shown below) will eliminate the lower ghosting. See Figure 23 below.

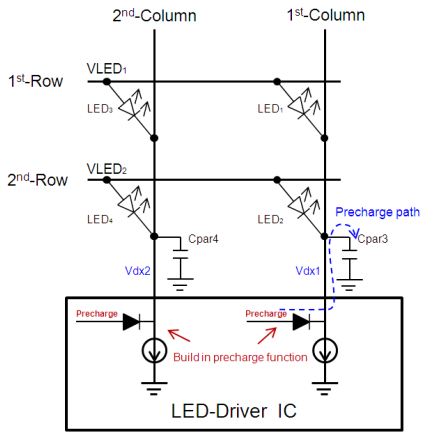

Figure 23. Built-in Pre-charge Function of Driver Eliminate Lower Ghosting

The ghosting problems and effects of macroblock solutions are depicted below.

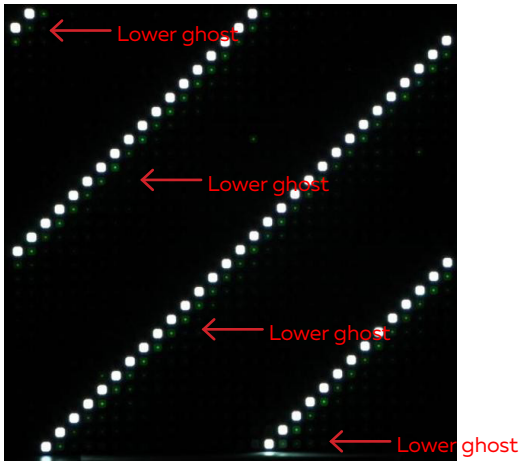

Figure 24(a). Lower Ghosting on LEDs

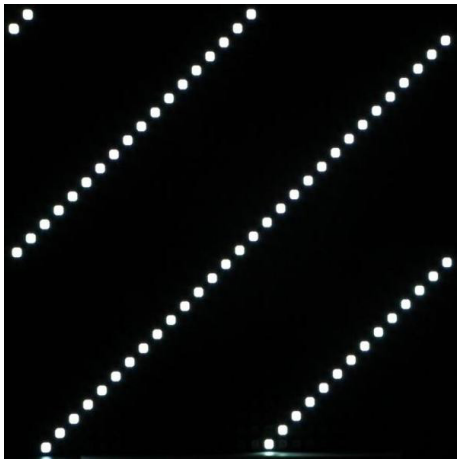

Figure 24(b). Without Lower Ghosting

Non-uniformity

In order to fix the lower ghosting, we use the pre-charge technique. However, the side effect is non-uniformity caused from the voltage differences among parasitic capacitances, especially at the low grey scale. Applying LED drivers with high accuracy of output current may solve the non-uniformity issue, and the following shows the uniformity performance on an indoor LED display.

Figure 25. Non-Uniformity Pixel Problem of Indoor LED display

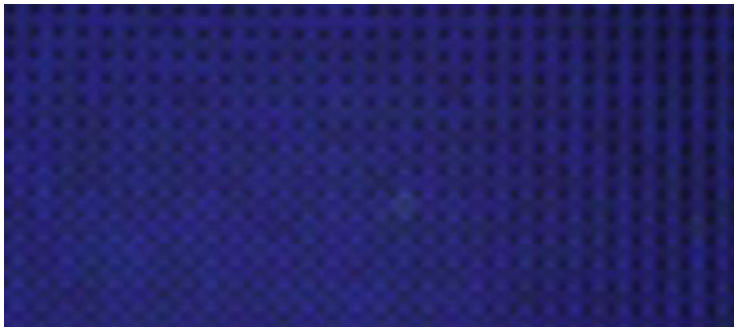

Figure 26. Uniform Pixels Using High Accuracy Output Current LED Drivers

Speckles

Due to the variation of LED epitaxy[2] process, the emitting efficacy and parasitic capacitance of LEDs vary. The speckles are easily noticed at low grey scale and low output current.

Applying LED drivers featuring the brightness uniformity will resolve the speckles on high resolution indoor LED display. The following pictures show the speckles view and the eliminated speckles view.

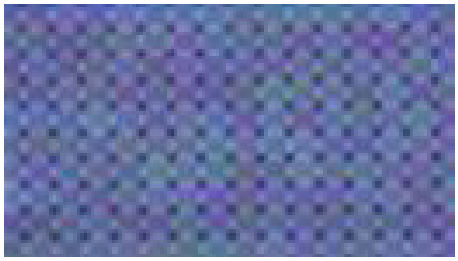

Figure 27(a). Indoor LED Display Speckles

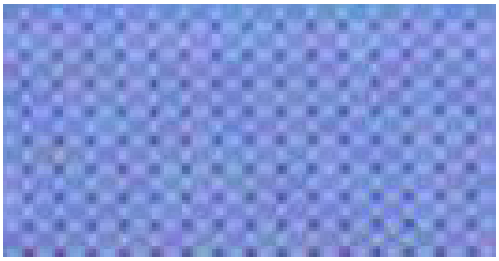

Figure 27(b). Display Speckles Eliminated

Black Bands and Enhanced Spectrum (ES) PWM

LED display designers face several other challenges as they strive to produce ever-larger products which deliver the best-possible image quality. One of the biggest issues is eliminating the blank bands which can occur when capturing the image of an LED display on a camera. As we discussed in the earlier section, this is caused by "slow-synching" between the display and the camera. This can be avoided by using a faster frame refresh rate (FRR). Unfortunately, larger displays require faster FRRs. As a result, it becomes increasingly difficult to achieve an FRR that's sufficiently high to avoid slow-synching effects as display size increases. One solution is Flash Module Array System (FMAS) based controllers which divide the screen into multiple blocks also called cabinets.

Black bands become a more significant problem as PWM control LED ICs grow to control larger, higher-quality displays where the length of their PWM operation cycle time grows longer. For example, the latest 16-bit PWM control with a 25 MHz reference clock requires 2.6 ms = 216 bit / 25 MHz, which is a frame refresh rate of 381 Hz. Here, a gray scale code of 128 for a total of 216 clock cycles generates 5.1 us (= 128 / 25 MHz) of ON time, and 2.6 ms minus 5.1 us of OFF time. The camera captures LED lamps in the OFF state during this 2.6 ms period.

Black-banding can be mitigated using a technique called Enhanced-Spectrum PWM (ES-PWM), a method for PWM generation which divides one long PWM cycle into shorter sub-PWM cycles. In the above example, if 128 clocks of the ON period are divided into 16 periods of 8 clocks each, creating an effective FRR of 6 kHz (= 381 Hz x 16). At 6 kHz, the refresh rate is high enough to avoid black bands with most cameras.

An original PWM code cannot always be equally divided. In this situation, the ES PWM function splits one ON period into rounded integers. For instance, to divide a gray scale code of 100 into 16 pieces, the ES-PWM circuit generates twelve of 6 clocks and four of 7 clocks to maintain a total gray scale of 100 (= 6 clock x 12 + 7 clock x 4).

[2] Molecular Beam Epitaxy (MBE) is a process of making high precision and purity compound semiconductor material.

Detecting LED open, LED short, & output leakage conditions

Many LED display systems are controlled remotely, making it difficult for an operator to detect any failures. Because the human eye is sensitive to a faulty lamp that remains constantly ON or OFF, the failure of even a few lamps can degrade the quality of a viewer's video experience. As a result, many displays implement ways to detect open and shorted LEDs, as well as output leakage conditions which can cause LEDs to malfunction.

An LED Open Detector (LOD) function monitors LED lamps for open-circuit failures. Under normal circumstances, a driver IC's constant-current output terminal stays at the head room voltage required by the constant-current circuit. When the constant-current circuit's LED fails and becomes an open circuit, the constant-current circuit drives its output terminal to almost zero voltage. The LOD function detects these telltale voltage changes and generates an error signal.

Similarly, an LED Short Detection (LSD) monitors the LED lamp for conditions which indicate the LED, and/or its driver are short-circuited to its anode's supply voltage. When the LED fails in a shorted mode, its output terminal reverts from its normal bias state to the full voltage applied to the anode. The LSD function distinguishes this voltage difference and generates an alarm signal.

An output Leakage Detection (OLD) differs slightly from the first two safety functions. It's designed to detect conditions which arise when an LED is forced into its ON state due to debris forming a conduction path from an output terminal to the ground. When this occurs, the LED is turned ON – no matter what the output of its constant current-circuit driver happens to be. The OLD element produces a small amount of current at its output terminal node which it uses detect any leakage path by monitoring the terminal voltage.

Low Grey Scale Enhancement

The human eye has more sensitivity to darker light sources than brighter lights. In other words, it recognizes which of two dark light sources emits more photons. However, when the human eye is saturated with bright light from two different sources, it cannot distinguish the difference.

For handling video image, low gray scale data requires more attention. Here a technique like gamma correction is widely used. As for LED display systems, software programming can implement a gamma correction function with both ON/OFF and PWM control drivers.

Recent LED drivers, like the TLC5958, integrate more proactive improvements on low gray scale handling. A common problem is that red LED lamps are stronger than green and blue with dark white image output, even though red, green and blue all have the same low gray scale data. This occurs because red LED lamps can turn ON longer than green and blue lamps due to its lower forward voltage. A Low Gray Scale Enhancement (LGSE) function can correct this difference inside the IC. Figure 28(a) has no correction while 28(b) has been corrected.

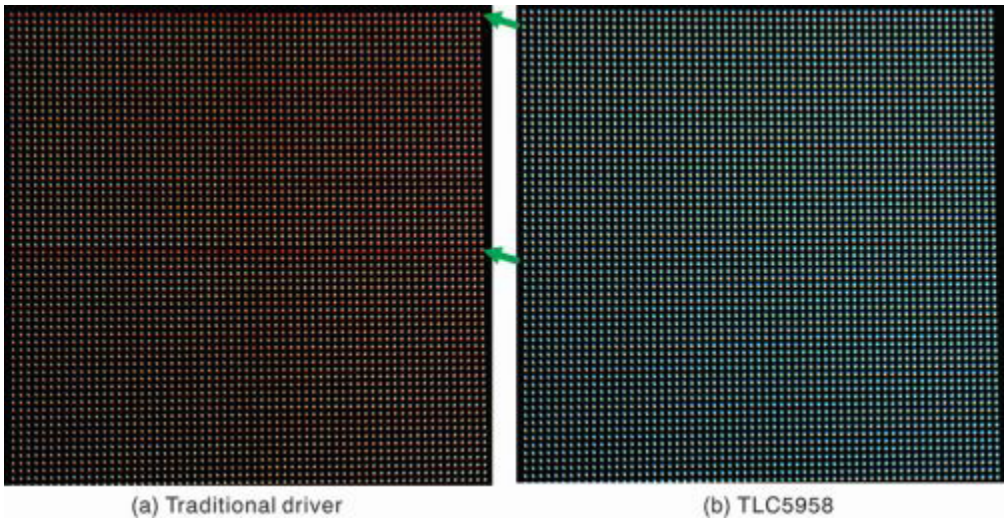

Figure 28. Two examples of low grey scale enhancement showing dark white image data

Regarding this low grey scale concern, LED current PWM pulses need very sharp turn-ON and turn-OFF times, or rise and fall times, TR and TF. If TR and TF are slow, low grey scale problems can get worse.

"First Line" issues and integrated SRAM

As mentioned earlier, ES-PWM control speeds up FFR. By using ES-PWM with the time-multiplexing anode control, the first line of time-multiplexing gets darker or dimmer. Figure 6a has two lines that appear to be more reddish than the others (very top and middle). All other lines look to be more white. This first line issue is caused when the green and blue lamps are not fully turned ON.

A solution to the root cause of the first line issue can be found by integrating static RAM (SRAM) bits to store gray scale PWM codes for the entire frame, thus avoiding data transfer time lag. For example, the TLC5958 integrates 48 k bits of SRAM on-chip for up to 32 times of multiplexing also referred to as 1:32 scan rate.

Macroblock attributes the "Dim Line" to low current due to parasitic capacitance on the first scan lines shown below. See Figure 29 for reference details.

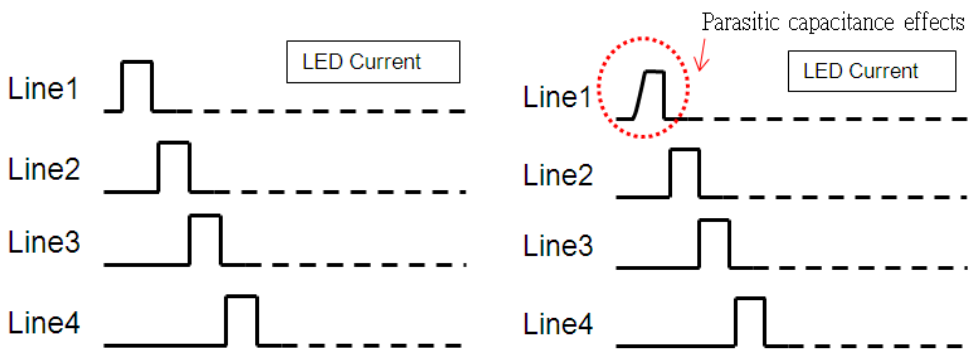

Figure 29(a). Ideal LED current waveform *Figure 29(b). Parasitic capacitance effects*

The proposed solution consists of compensation by increasing LED current as shown below.

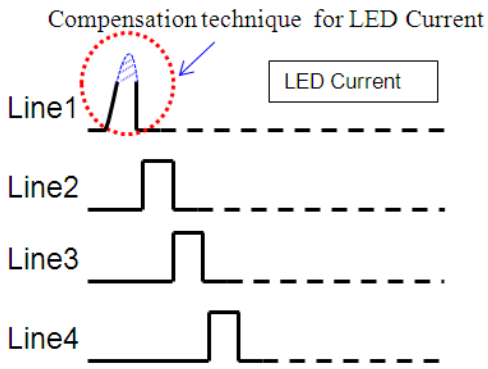

Figure 30. The proposed compensation technique

This compensation technique results in the removal of "Dim-Line" as shown below.

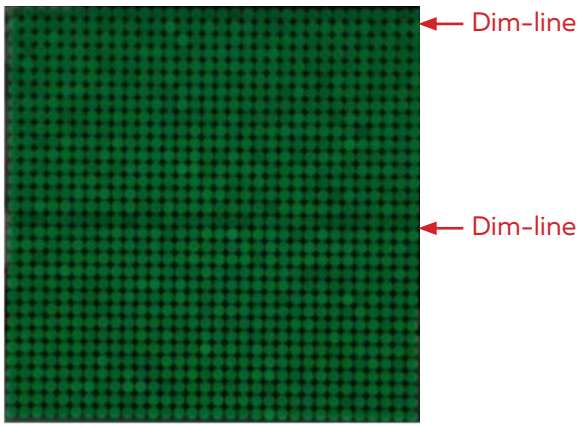

Fig. 31(a) Dim line at first scan line

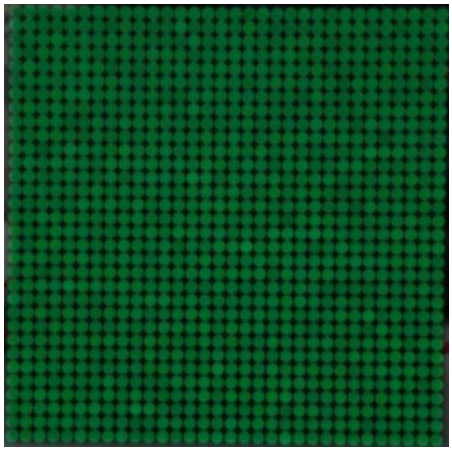

Fig. 31(b) Dim line disappears

Design tips for display systems and driver ICs

Inrush current control

In general, an LED display system handles huge amounts of current. For example, eight pieces of 48-output LED driver ICs controls 25 mA each. The total current is 9.6A. The biggest problem with an LED display system is that this 9.6A of current keeps turning ON and OFF at very high frequency with fast TR and TF.

Many LED driver ICs come with noise reduction features such as delay between each output. Because a system handles 10 MHz order of digital signal on its PCB, noise management is an important design factor early into the project.

Thermal error flag / pre-thermal warning

As stated, an LED display system handles huge amounts of current – which translates into heat. This excessive heat can cause thermal shutdown and unexpectedly stop LEDs from working in certain designs. It is a major issue when the entire display stops working, but viewers might think that the system is simply turned OFF. However, in most cases, only some modules stop working and viewers notice malfunction (Figure 32). Because of this, many LED driver ICs do not come with a thermal shutdown function. Instead, they come with a thermal error flag (TEF) or pre-thermal warning flag (PWF) function.

Figure 32. LED display with some modules inoperative.

These flags are generated by a circuit similar to thermal shutdown detectors. Instead of stopping an IC when temperatures get hot, hot temperature condition flags are sent to an image processing controller. Upon receipt of a flag, the controller cools down the system by reducing screen brightness, showing darker images, or simply stops the system for a moment. Heat becomes a factor when the sun hits the screen and brightness is maximized.

If the heat impacts the power supply, then all the modules supplied from the particular Power supply will be turned off. This manifests itself usually as long strips or blocks of black modules.

48-output driver

PCB layouts can be nightmarish on a typical LED display module design. We compare system concept sketches utilizing one 48-output driver (Figure 33a) and three 16-output drivers (Figure 33b). Both diagrams are a 16 x 16 RGB matrix, which equals 768 LED lamps. It is clear that a 48-output driver like the TLC5958 can simplify your PCB design.

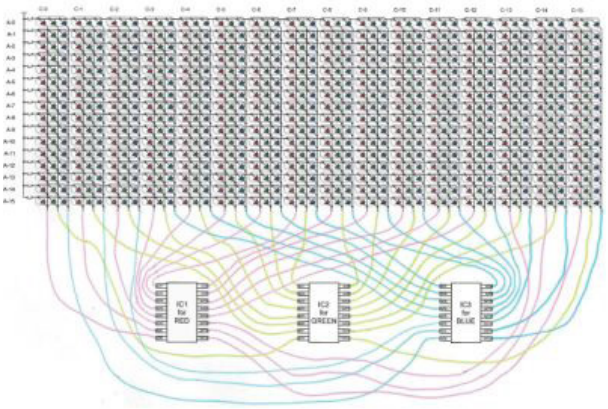

(a)

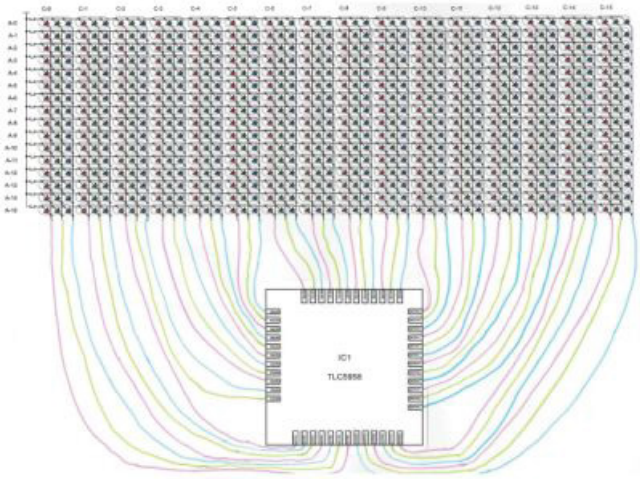

(b)

Figure 33. PCB layout comparison between 48- and 16-output drivers.

Flash Module Array Control Systems

It would be cost prohibitive if not impossible to implement very large high resolution LED display screens for displaying images and videos using the solutions provided thus far. The software for mapping and driving billions of pixels in each of thousands of frames per second, using 24 bit grey scale, would be beyond the most powerful graphic control systems. See the 4,080 square meter New Century Universal Center LED screen's picture below. The design and installations of large LED screens are made possible by Flash Module Array System invention.

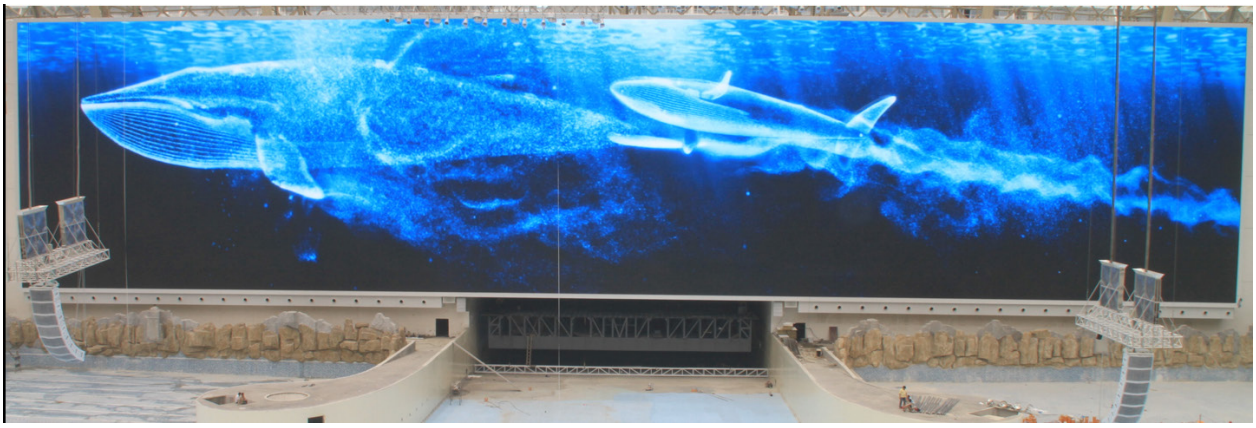

Figure 34. 4,080M² LED in New Century Universal Center, Chengdu, China (Novastar)

Before Flash Module Array Systems innovations by One World, LED control systems simply redirected the video output of the host computers to signal splitters which divided the signals into multiple groups and redirected them to LED driver modules in order to manage the groups of image pixels for driving groups of LED signals. This and other prior art LED screen solutions were the result of LED front panel indicators, number displays and scoreboard displays. These schemes introduce delays due to buffering and processing which create synchronization problems with the host produced sounds for multi-media file types and videos.

One World solved these and many other problem by inventing Flash Module Array Systems which moves the address mapping function from the host processor to the controller. Figure 35 shows the block diagram of the FMAS teaching.

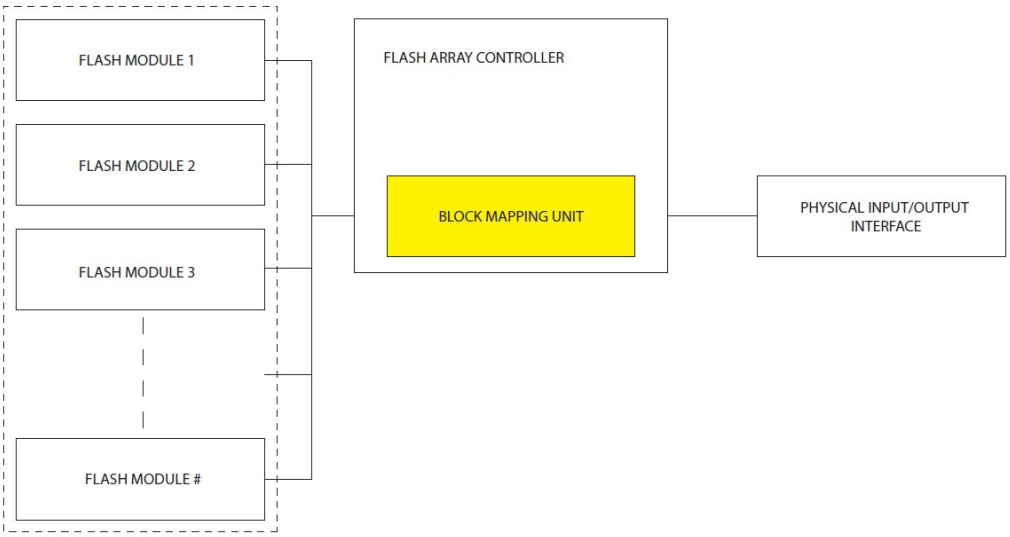

Figure 35. Patented Flash Module Array System of One World Technology

This invention allowed the images (each frame) to be divided into smaller manageable chunks called blocks. The image to be displayed is then divided into blocks and each block is mapped or processed by a dedicated Flash (-based) Module also called "receiving card" or "controller". Each Flash receiving card module would map only one of the blocks that makes up the image to be displayed in a coordination with other controllers in the array to create LED screen's seamless display of images in online (Synchronous) or offline (Asynchronous) mode. Flash Module Arrays are equipped with standard interfaces through which they communicate with each other and the "upstream devices", in this case LED modules.

This invention offers a quantum leap advance and significant advantages over the prior art methods of using host-based mapping. The prior art, host-based mapping is the basis of the existing LCD monitor controllers and drivers along with signal splitting techniques use by older LED display and sports scoreboard manufacturers. This technique rather than reprocessing the signals intended for another output display device allows direct image and other contents processing by the LED Screen control system while freeing host resources for other concurrent operations with the LED display. FMAS controllers have significantly expanded the limits of the prior art for LED Screen design including single host processing limitation for each LED display. Very large LED screens impossible to design in prior art are now common place producing stunning shows and amazing crowds and visitors in landmark events and venues. See example in Figure 36 below.

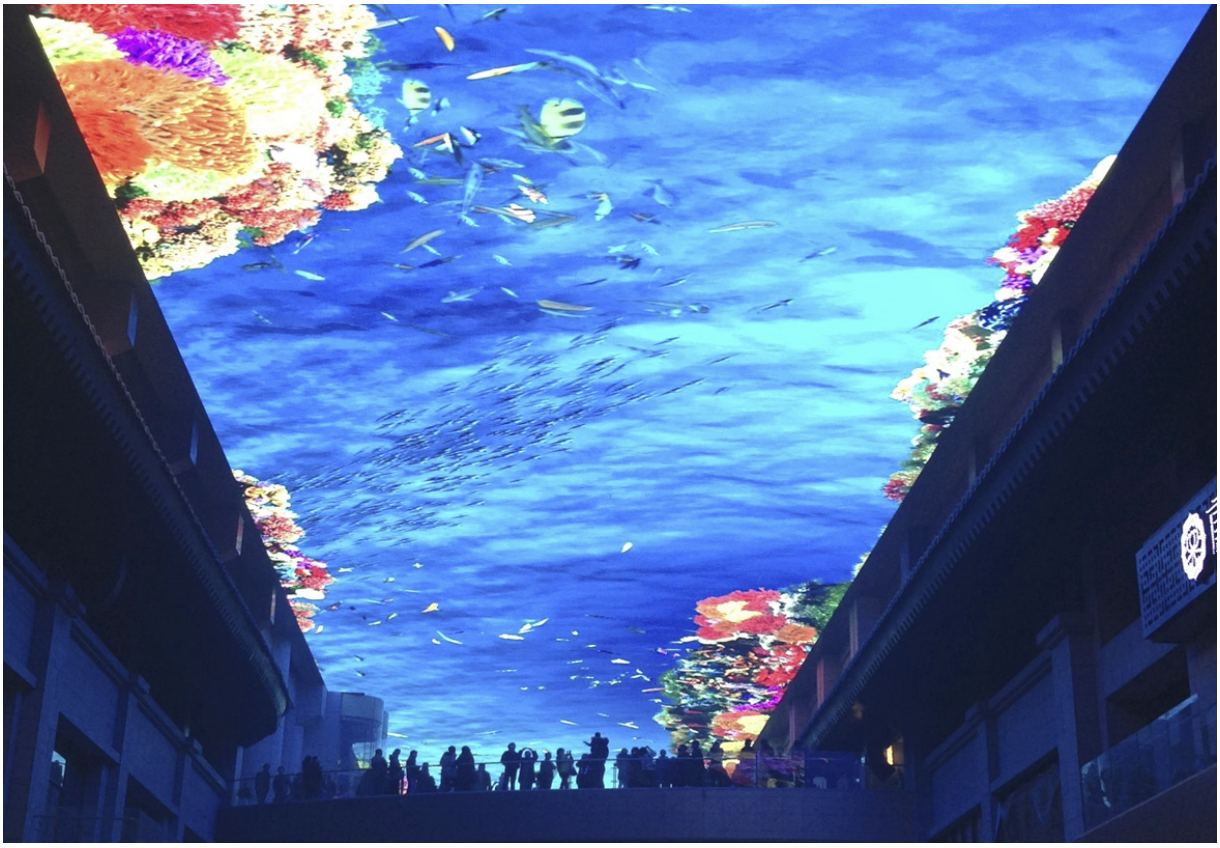

Figure 36. Sky Screen 3,024 M², Xian China, Courtesy NovaStar

Another invention that has been instrumental in simplifying the LED control systems and reducing their implementation cost is Colorlight's Sender method which eliminated the "sending cards" or the proprietary host-based interface and controllers such as VMX3 and Linsn SD801 and TS801 PCI sending cards. This invention in conjunction with Software Control Panel which teaches how to setup and update Block Mapping Unit of the Flash Module Array Systems complete this quantum leap advance in the design of the LED Control Systems.

Software Control Panel Invention

This invention allows setup and updating of the Block Mapping Unit for one or more Flash Module Array Systems. While this invention solves the key problem of how one or more FMAS can be setup and used in a varying application environment such as updating multiple Mobile Phones used by sales team members or FMAS used in IP-Cameras to search for a particular object or person, its primary application today is in programming, configuring and driving LED Control Systems incorporating FMAS design and architecture.

Following Figure 37 shows the block diagram of the subsystems of a Software Control Panel (Softpanel for short) in relation with multiple FMAS configuration. Colorlight's "no Sender" invention is a quantum leap forward in the design of FMAS Softpanel control systems.

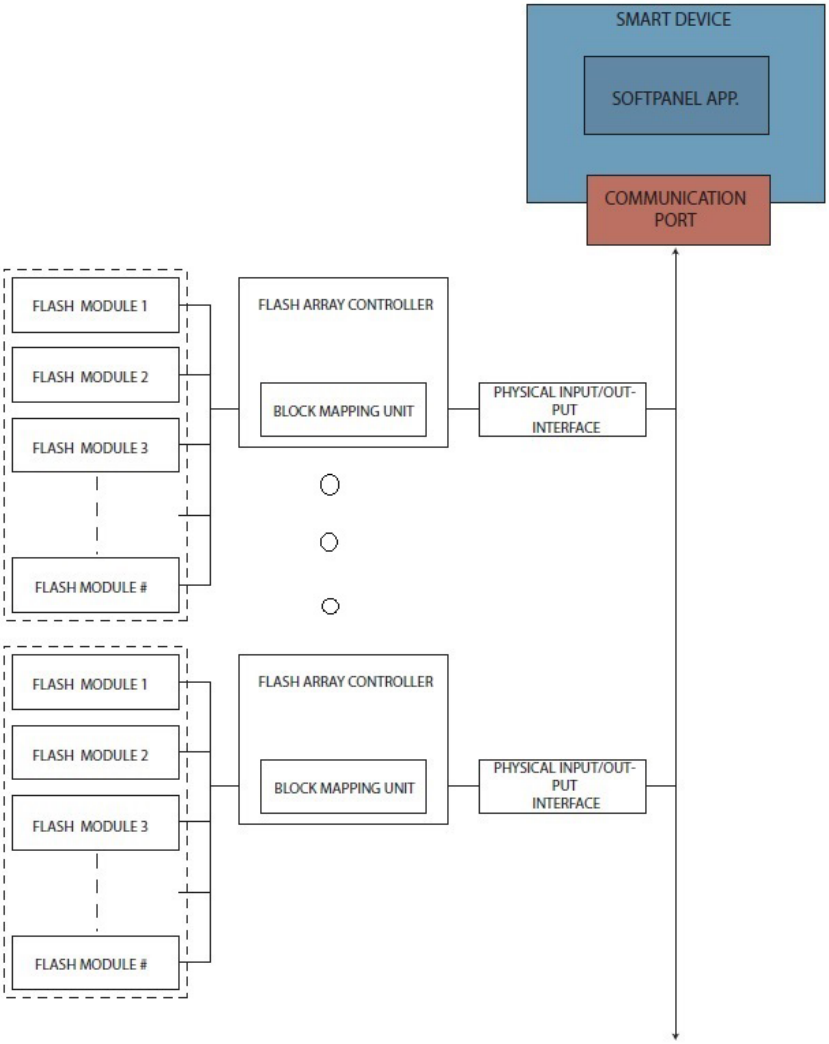

Figure 37. Software Control Panel with a Cascade of Flash Module Arrays

Following is a typical data wiring diagram of an FMAS-based LED control systems. In this diagram the LED management software in the laptop incorporates Software Control Panel invention and the FMAS shown consists of 9 controllers (receiving cards) for a typical LED screen with 9 cabinets. See Figure 38.

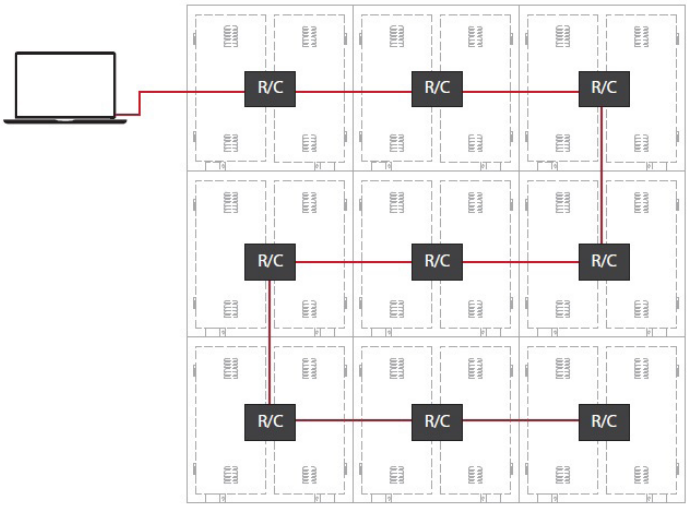

Figure 38. Software Control System and a Typical FMAS LED Display Cabinets

Colorlight inventions have advanced the architecture of Block Mapping Unit. These inventions include:

- ZL201320499670.3 Synchronous/Asynchronous Control System
- ZL201320745853.9 Control Module Maintenance
- ZL201310665353.9 LED Display Control System Testing

These inventions have advanced the Block mapping unit functions and methods for interfacing with Flash Module Arrays and in cascade configurations. One key advancement is the detection of systems and communication faults and automatic fallback to local control of the display. This is an important advance that was contemplated by FMAS and FMAS Cascading inventions of One World.

In particular, ZL201320499670 teaches development software control of FMAS control system by eliminating the Sending Card. This invention has allowed expansion of FMAS block mapping unit functionality. These functions include not only communication with the host systems for reprogramming and updating the FMAS which is implemented using Field Programmable Logic Array (FPGA) and the Flash Memory Module Array but also cooperation with other FMAS units in cascaded configuration locally. This allows automatic dual mode operation of control FMAS.

This has facilitated the offline operation of the LED display should the control system in the array detect any disruption in the communication or in the host operations. This is termed Asynchronous operation of Display control system as opposed to Synchronous where the host sends frames of the images to the display's FMAS or Cascaded FMAS for local mapping to LED modules. This asynchronous operation allows the screen to continue to display the latest advertising loop in case of host, internet or communication disruptions.

Colorlight's T9 sender service eliminates the need for sending card. This technology facilitates the architecture of platform independence for implementation of LED display control systems. This advance allows implementation of smart displays for V-Commerce and is a significant development. Figure 39 depicts Colorlight control system using a PC based LEDShowT9 software control panel and a cascade of 9 receiving cards in a 3X3 cabinet LED display system.

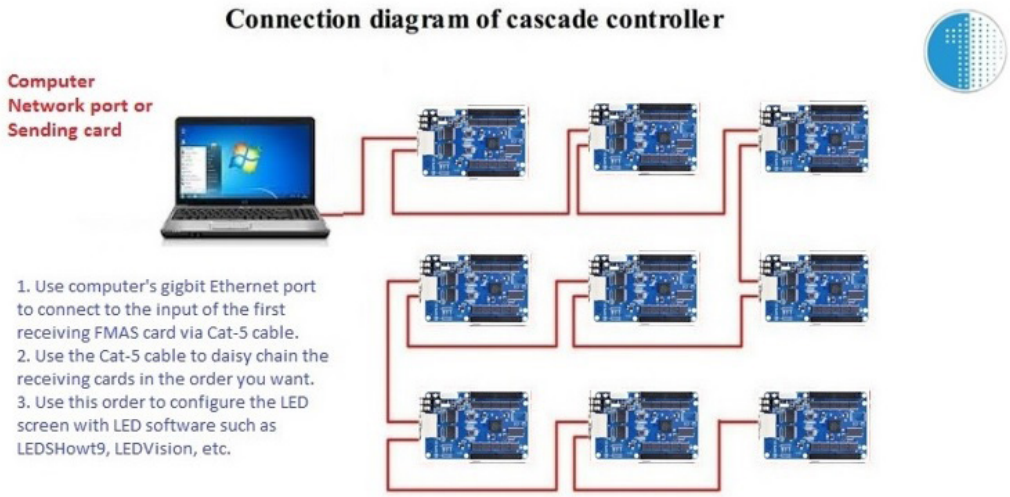

Figure 39. Colorlight Software Control of LED Screen with Receiving Cards

Dealcodes Design Considerations of LED Display Screens

Now, we review some of the issues which affect the image quality and reliability of Dealcodes such as Barcode, QR-code and others displayed on LED screens to facilitate transaction processing. We will discuss some of the technologies and design techniques used to address the related issues.

Deal Codes Display Requirements

The next generation of LED displays incorporating Virtual Commerce (V-Commerce) technology advances will enable user interaction and transactions by deploying the digital codes and user mobile Apps. The universal acceptance of mobiles for personal communication and the LED display screens for public advertising and commerce using presentation of digital electronic and graphic codes for a variety of applications is creating new demands. Commercial advertising on LED displays requires data providers and merchants to take full advantage of the limited duration advertising slots, showing consumers more contact information and to successfully attract attention efficiently. Consumers with smart phones are now able to scan two dimensional codes such as QR codes. This will undoubtedly improve consumer experience. This application requires further design improvements and refinements of the LED displays features and functions.

Market trends of the two-dimensional code

Barcode was introduced in 1970 to address the Point-Of-Sale (POS) and inventory management problems in merchandising. This code is limited to 20 alphanumeric characters. Following, Figure 40 pictures a typical barcode use. This code is universally adopted and used as UPC (Universal Product Code) but it has not received widespread adoption for other digital applications in e-commerce.

Figure 40. Coke Coca merchandise barcode (Barcode)

Denso Wave Incorporated introduced Quick Response Code (QR Code) in 1994, also referred to as two-dimensional barcode (2D Barcode). This code significantly expanded the limitation of Bar Code by accommodating a large capacity of about 7000 English numbers or characters with more than 10 times faster encoding.

Since 2002, QR Codes have been used to represent website URLs so consumers and interested parties can access additional information using their digital devices. This has established a de facto standard for web information access by codes. Forrester Research, Inc., survey showed on average, in the United States, Britain, France, Germany, 15% of consumers were using mobile phones to scan two-dimensional code (Figure 41). This trend is expected to continue well into the future.

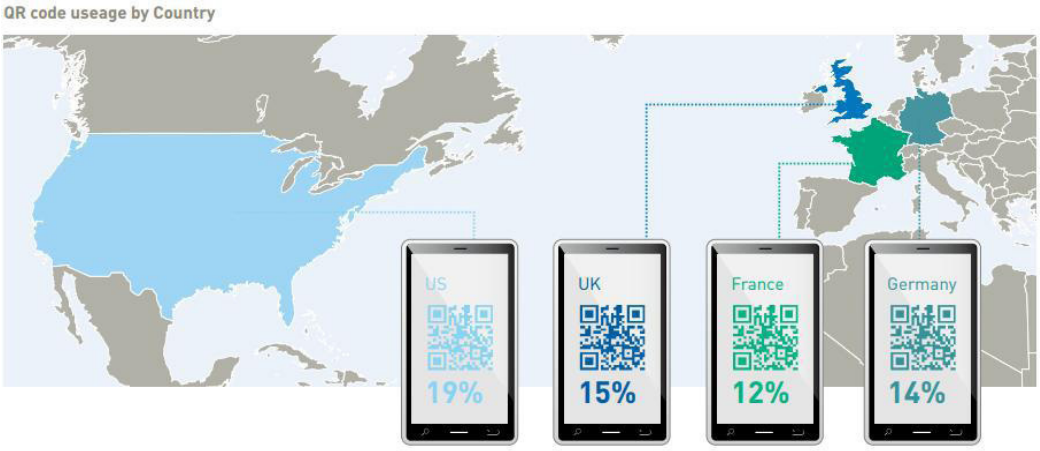

[22]*Figure 41. National Mobile Two-dimensional Code Usage*

LED display basic working principle

LED display screen is composed of control and display modules, its size and resolution is determined by application requirements, however, the contents and timings are controlled by systems and software that receive the original messages for display. These features are bound by the systems architecture of the applications.

Another basic LED display feature is the scanning or scan rate. The various design problems that impact the picture presentation and the image quality were covered in previous sections. The image quality impacts the communication and readability of the other information presented such as Dealcodes, especially for the indoor LED displays.

Display quality factors such as components costs, luminance and scan rates impact the image quality. Image quality can cause problems resulting from reduced LED display refresh rate or color clarity. (See Figure 42 below showing a captured image by a smartphone). We had previously covered the image quality problems and solutions.

Figure 42. Insufficient LED Display Refresh Rate

Two-dimensional code to limit the application of LED Display

Higher resolution modern LCD displays have resolved this problem however their size, cost and brightness factors fall short of meeting out of home advertising requirements and advanced Dealcode processing.

The LED display working and design principles applied to two-dimensional codes requires addressing the following problems.

1. The Dealcodes Pattern Recognition (Position Detection)

QR code position pattern allows quick recognition with three corner finders. Once the code is scanned it is only a valid scan if it were properly displayed with high enough refresh frequency (indoor >500 and outdoor>1000) and without distortions. See Figure 43 below for details.

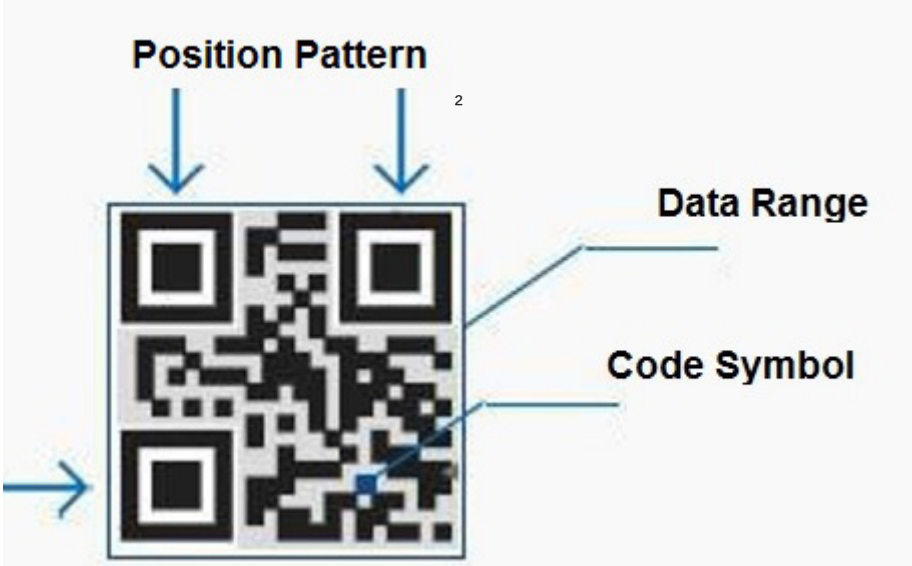

[2]*Figure 43, Three Positioning QR Code Icon*

2. Symbol Deformation (distorted QR code)

Poor performing LED display designs with insufficient gray scale (< 14bit), pitch to support details or screen zoom could lead to code symbol deformation, even though the LED image may appear normal to human eye. Following figure 44 depicts such distortion due to scaling and size reduction of image containing a code.

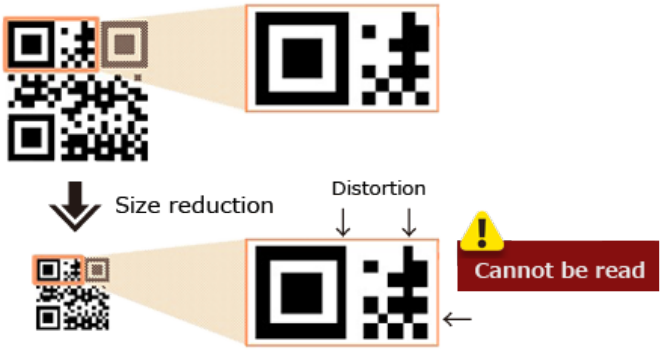

Figure 44, QR Code Symbol Deformation

LED Code Display Application Examples - "the traditional switch-type"

Depending on the LED display driver chip, can be divided into zones, "the traditional switch-type", two kinds of "Scrambled PWM type" to accumulate technology chip, for example, "the traditional switch-type" drive chip includes JIX5020, MBI5024, etc., "the traditional switch type "driver chips at the" refresh rate "," gray scale rating "and" LED lamp brightness «three performance, the need for trade-offs, the general application, in order to obtain high brightness LED lights, it will select a» high brightness LED lamp mode «, so Even if the refresh rate, the effectiveness of grayscale variation (indoor LED display: Refresh rate frequency <500Hz / outdoor LED display: the refresh rate <1000Hz).Two-dimensional code is applied to a "high brightness LED lamp mode", using a mobile phone to scan, there will not scan properly situation.

"Traditional switching" driver chip - low gray-scale, high refresh (high refresh rate mode)

With "Traditional switching" driver chip such as JIX5020, MBI5024 you can choose a "high refresh rate mode" to 1:16 scanning for the LED display. For example, using "Traditional switching" technology of LED driver chips, when broadcasting a two-dimensional code images (Figure 45, bottom left of the original image) to improve code recognition.

Insufficient gray scale can confuse two dimensional code elements with the background image details.

Using the "traditional switch-type" drive chip selecting "high refresh rate mode" for two-dimensional code in images, with insufficient grayscale and using smart phones for scan:

1. The three position pattern and its background color coding can blend and confuse the scanning app, significantly reducing the success rate of the two-dimensional codes.
2. Reduced scanning success affects or damages advertising campaign impact or results.

Figure 45, "traditional switch-type" drivers - high refresh/low gray scale impact on Two-dimensional Code Recognition (Blending)

"Traditional switching" driver chip - high gray scale, low-refresh (high grayscale mode)

With "Traditional switching" drivers including JIX5020, MBI5024 as LED driver circuits in practice, with the control system, choosing a "high grayscale mode" to 1:16 scanning the LED display, broadcast a two-dimensional code images (Figure 46, bottom left of the original image).

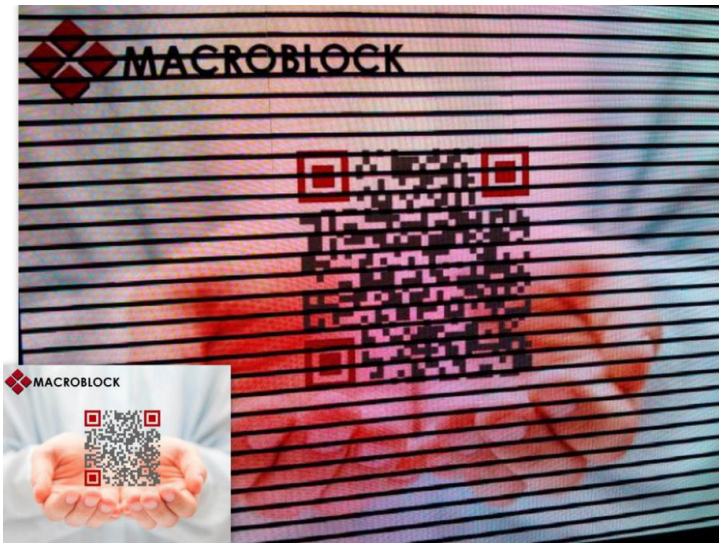

Figure 46. "the traditional switch-type" Drivers - high gray scale/low-refresh impact on Two-dimensional Code Recognition (distortion)

With "traditional switching" driving Chip Select "high grayscale mode" displaying the two-dimensional codes, due to lack of refresh rate, will have black striping. This will introduce distortions that can confuse the mobile phones scanner apps, reducing scanning success rate. Thus hurting or failing the advertising campaign success and goals.

Advanced Macroblock drivers incorporating Scrambled PWM such as MBI5151, 52 or 53 series address many of the problems discussed above by offering high refresh rates and high grey scale. This ensures high brightness as well as sharp images for close up and code scanning.

Scrambled PWM technology improves the traditional pulse width modulation (PWM) technique, by converting dispersion of the conduction time of one image into a number of shorter conduction time. This increases the overall visual refresh rate. So in comparison to "traditional switching" driver chips discussed above, the "Scrambled PWM type" can significantly enhance "refresh rate" especially for indoor LED display (Refresh rate> 500Hz / outdoor LED display: the refresh rate> 1000H). The LED brightness and the gray scale can dramatically be increased thus improving accuracy for identification of the two-dimensional codes (Figure 47, bottom left of the original image).

[22]*Figure 47. - "Scrambled PWM type" drive chip - high gray scale/high refresh improves success of two-dimensional code recognition*

The "Scrambled PWM type" drivers MBI5041, MBI5042, MBI515X from Macroblock, as shown below (Figure 48), in a variety of application environments, ensure "refresh rate" at least greater than 1,000Hz, enable consumers' effective interaction using of mobile phones and smart devices in scanning two-dimensional codes, to meet the market needs in V-Commerce technology frontiers. (Source: Macroblock)

MACROBLOCK SCRAMBLED PWM

outdoor | Indoor

Features	P16	P10	P6	P5	P4	P3	P2
Scan Rate	Fixed	1/4	1/8	1/16	1/16	1/32	1/32
GrayScale (Bits)	16	16	16	14	14	14	14
Refresh Rate (HZ)	> 10000	>8000	>4000	> 2000	> 2000	>1000	>1000
Brightness (NITS)	> 8500	>6000	>2000	> 1500	> 1500	>1500	>1500

Figure 48. – Macroblock Typical Scrambled PWM Driver Specifications

Integrated Solutions

Today thousands of companies are engaged in design and manufacture of LED displays, parts and subsystems around the world. Many of these companies are making important contributions to proliferation and expansion of markets and applications for LED display systems.

The products these companies manufacture, deliver and install are primarily used in advertising, sports venues and public events in the form of fixed indoor, outdoor and semi-outdoor or portable in the form of variable messaging or full color video advertising trailers and rentals.

The users need to consider the various products and technologies in order to make sure their organizations are investing in solutions that are fully licensed and incorporate genuine products produced by original manufacturers. One of the most critical parts is the control system and it is of paramount importance for users to select the solution that is most advanced and adaptable to future advances in V-commerce. For example, the patented Colorlight FMAS control systems that eliminate the sending card is one such advanced solution which was previously discussed. See pictures 38 and 39 for diagram of Colorlight cascade of FMAS control system without the sending card, This is depicted by the green arrow (data link) in the bottom of the Figure 49 below, between the LED Display Control System and the first receiving card in the FMAS receiving cards. This is in contrast to the arrows at the top of Figure 49 below that depicts the control system, Video controller, DVI cable, Sending Card, Serial Line (or USB) to the Sending Card and the Fiber Optic or other cables between the sending card and the receiving card or Data Distributor (see Architecture Primer for more details of prior art.

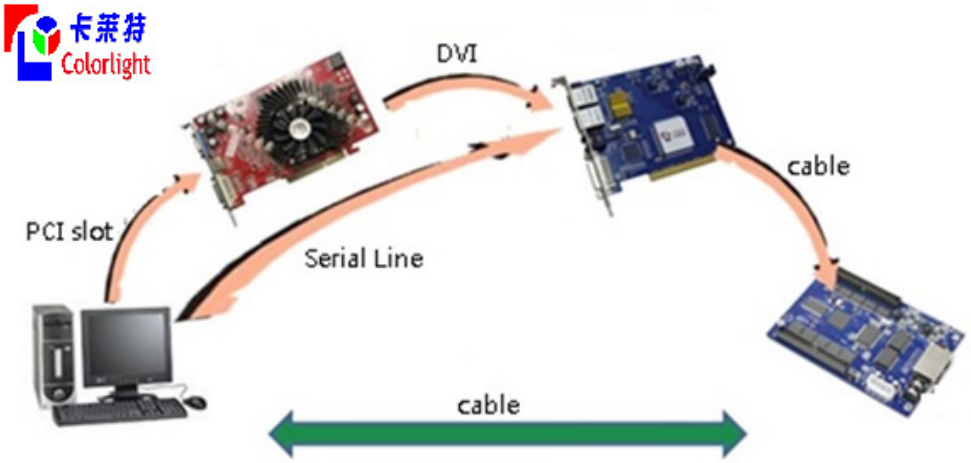

Figure 49. Colorlight Control Systems with (top) & without Sending Card

The above system shows the control system architecture of prior art before Colorlight's invention at the top and the Colorlight invention that eliminated the PCI Video Card, PCI Sending Card and the Data Distributor at the receiving end in the LED display and replacing them with a cable in the bottom (Green arrow) and Software Control Panel.

The advanced patented Colorlight control systems ensures the state of the art design remains flexible and upgradeable with evolutions of hardware and software platforms. Additionally, the reliability and maintainability is greatly enhanced by eliminating numerous hardwired and hardware components. This not only reduces the purchase and installation price it will also minimize the LED display systems TCO (Total Cost of Ownership). In summary Color light inventions have the following advantages:

- First, this solution is a more economical and can reduce the transmission subsystem's hardware costs. It eliminates the PCI sending cards and graphics card with DVI interfaces. The reduction of the corresponding firmware, and the use of related operations makes the system more efficient and flexible,
- Second, due to the use of software to transmission and direct image processing, the solution is no longer subject to DVI frame rate limitations (normal program requires the DVI @ 60Hz). It can automatically match the frame rate of the video itself (common video frame rates of 29.97Hz, 25Hz, etc.) and reduce the secondary processing that causes loss of image details. Maintaining the details of the original picture improves quality of video presentation. Also, frame rate control by software can reduce communication requirements, allowing utilization of standard twisted pair cables. This allows significant savings in cabling of the control computer to display for considerable distances.
- Third, the Colorlight Softpanel for LED display control invention utilizes a transmission principle that eliminates the restrictions of DVI interface. This helps user easily achieve an arbitrary pixel resolution within 1G bandwidth to display. For example, applications such as the stadium screens and banner advertising can be accomplished without the use of a large number of complex, expensive and unreliable video segmentation and splicing devices.
- Fourth, Software Control System invented by Colorlight replaces all the prior art hardware by programs the Block Mapping Unit of the Flash Module Array System in the receiving cards. Therefore, LED display presents the contents consistent with the transmitting software platform. Prior art's original program replication computer DVI graphics data for the LED display shows and the layered software is required not show outside of software content to LED display.
- Fifth, because the primary application of the LED displays is in commerce and advertising, the security requirements for transmission of contents to display is of paramount importance. This invention improves the broadcast of content security and can effectively prevent operator errors and inadvertent display of wrong contents.
- Sixth, all the links of the Colorlight invention for signal transmission can be implemented using standard network protocols. Using standard communication links and compliant international standard network equipment, greatly improves expansion ability in major projects, reducing costs. The utilization of LAN networking scenarios in installing LED displays has significant practical value.

For more information you may refer to latest version of One World LED Handbook or contact a certified One World LED reseller in your area for more information.

Virtual Commerce and Smart LED Display Systems

One World and Elite Marketing have integrated all the above explained solution technologies and have provided additional tools (explained in other documents) that will allow any small or medium sized company (SME) to get established and sell in any target market in the world. The SMEs will be able to market their products and brands, advertise, find buyers and clients globally, sell their products and services directly or through agents, distributors and resellers at a reasonable cost. These tools and system comprise the V-Commerce platform.

In effect, Virtual Commerce is an electronic platform that makes virtually any and all transactions or dissemination of information possible. Currently, transactions are performed in non-electronic (physical or real transactions in multi-party) or semi-electronic (email, e-commerce, phone, fax, etc. in two-party transactions with physical fulfillment by third parties). Virtual commerce will close the loop and allow multi-party transactions through a series of inventions that solve and address current problems and shortcomings that have prevented this advance so far.

V-Commerce allows establishment of Virtual Shops on Virtual Malls using outdoor platforms of digital displays globally. The users and clients use their smart devices to directly accept offers, order, trade, clip coupons, purchase and conduct all other possible transactions in a true multi-party setting, using any currency or method of payment with their target Virtual Shop (in a Virtual Mall or standalone Virtual Shop) and ship or accept delivery anywhere in the world.

The key difference between prior art's e-commerce and the new V-Commerce is that the former is a two party system to system communication and in contrast the latter is multisystem communication platform between a Data Provider (DP), a Data Manger (DM) acting as electronic agent or E-commerce supplier, a Data Display system acting as a Virtual-shop (storefront or an electronic mall) and a Data User usually equipped with a smart phone or tablet capable of communicating with one or more of the V-Commerce parties listed here.

One World V-Commerce innovations allow transactions as virtual point-of-sales platforms, direct and indirect methods of products, services and information sharing, marketing and display. Additionally these inventions allow various forms of virtual management of the commerce. One World has also innovated the transactional methods for virtual POS systems and provided backwards and forwards-compatible methods for interaction with said systems.

V-Commerce incorporates methods for representation of outputs as scalable, encapsulated, "render targets" which allow for placement-aware and context-sensitive "virtual objects". For example consider the Dealcodes system in practice, which in standard implementation will be treated as a virtual object. Many of these objects can be processed concurrently by smart displays in multiparty model which incorporates Data Displays, Data Users (mobiles, tablets), Data Managers (agencies and e-commerce sites) and Data Providers (source and suppliers).

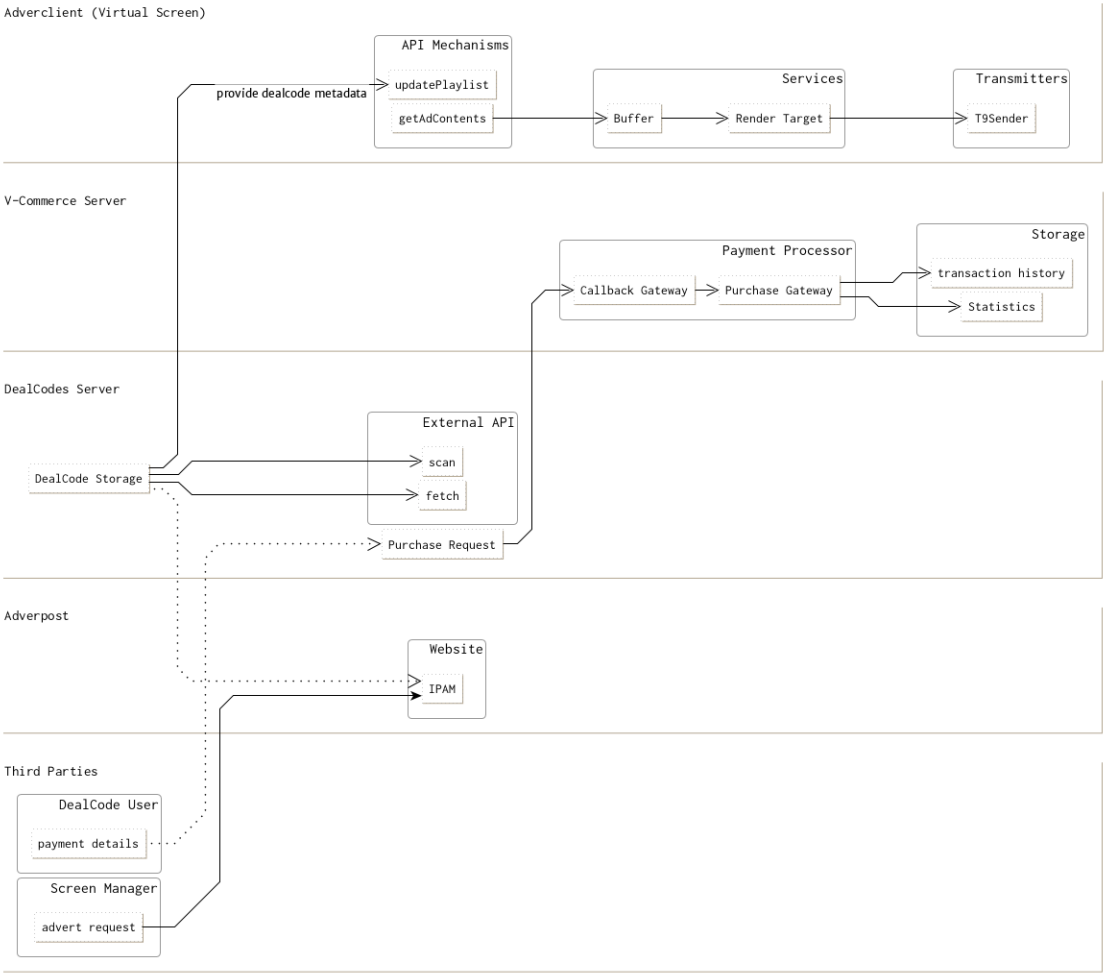

Figure 50. V-Commerce Processing of Display Objects including Dealcodes

The above diagram in Figure 50 depicts how the metadata-laden virtual object is told to represent itself as a Dealcode object in the render target of the Virtual Screen. The displayed object would itself contain encoded metadata appropriate for the display purpose, or in this case: identification of the Dealcode id. An example depiction below shows the Dealcode object in action encoded as a QR Code. Advertising Interaction of this object with an end-user device such as a mobile phone or tablet requires computer vision or audio recognition technology. Therefore scrambled-PWM technology is crucial for removing roadblocks regarding the timings and processing speed of mobile device cameras.

Figure 51. Dealcode Object, QR Code as Separate Object displayed on Advert

The appearance of a DealCode is not limited to QR Codes, as the object itself is not defined by the image but rather the metadata, it would be possible in future to display DealCodes which make use of other features of Smart LED Displays systems for improved interactions. After the effect of an interaction with a Smart LED Display to retrieve metadata about the virtual object being displayed (which may link to any of the types of "deals" as described in relevant documentation), the V-Commerce servers linked to the mobile application may begin to interact with other servers using the metadata pulled from the LED display.

In turn, the Smart LED Display itself may interact concurrently with many of those other external systems or the mobile applications for the fore mentioned V-Commerce methods.

To summarize, One World has made the following key contributions to Virtual Commerce technology:

- invention of transition method for enabling interoperability with existing services
- invention of interaction methods with said virtual objects
- invention of a dynamic referential object for forward-identification
- invention of method for display of virtual render targets on existing LED products

Conclusion

This paper covers general architecture and design principals and problems that are primarily related to the Chinese3 LED display screens as a primer.

The various aspects of the design are covered in light of certain parts and solutions as provided by major suppliers to the industry. This certainly is not the only way to design or build various LED display subsystems and or subassemblies and is offered only to deliver a complete and realistic design primer by discussing the key design issues.

This design primer has reviewed key architectures, design issues, parts and subsystems for LED displays. More specifically covers, numerical example, specifications, key points in IC data transfers, common design errors and pitfalls in the LED display system building. Also, we have briefly covered various LED display driver features that can improve video output quality especially for displaying codes in v-commerce and other commercial applications. Certain design considerations and tips for making LED display system's design easier and more efficient were also covered.

Additionally a quick review of Virtual Commerce and innovations that enable expansion of the role of LED Screens from advertising tool to a fully capable V-commerce storefront was provided. This enables users to decide what features they should include in their projects.

We hope this primer provides you with a good overview of the key design areas of the LED screens. A good design can ensure the success of the intended applications. For more detail on different versions, types and implementations of the LED designs for various indoor, outdoor, rental, portable and mesh screens refer to One World LED Handbook.

Credits to cooperating organizations and people for contributing to this Primer go to: EDN Magazine, TI Corporation, Macroblock, Colorlight Tech Co. and One World Technology of Suzhou.

[3] As opposed to the American LED display architecture and control system pioneered by Daktronics. For comparison of these two primary architectures refer to LED Architecture Primer paper by One World.

Notes & FAQ

How to improve the brightness of LED display

Source: www.kszled.com

LED brightness can be improved through the following two methods:

1. To increase the light output of the chip itself: light output can be increased through improving the luminescence efficiency of the chip's active layer or improving the external light extraction efficiency by optimizing chips' shape or making larger scale chips that run high density current.

2. To use the light effectively. In other words, to increase the amount of light that irradiate towards the needed direction. In this method, light wave control technology is used.

Through a better design of the optical structure shaped by the packaged epoxy resin, the light can be controlled to shine towards expected direction, thereby improving the brightness of LED. The above are the methods to improve LED brightness, if the brightness of LED display runs under expectation, methods listed below can be adopted:

1. To alter the current magnitude that runs through the LED. Generally, LEDs allow a 20 milliampere operating current continuously. Only red LED has saturation phenomenon, other LEDs' brightness are in direct ratio with the current amount that runs through them.

2. To realize grey scale control through adopting PWM (Pulse-Width Modulation) method. That is to change the width of the light pulse (duty cycle) periodically.

If the time for the relighting cycle is short enough (in other words, the refresh rate is high enough), the dithering of the luminescence pixel cannot be felt by eyes thanks to the visual persistence trait. As it is more adaptive to adopt digital control to realize PWM, meanwhile, as microcomputer is widely used to provide the content to display in LED screens, nearly all of the LED control systems are composed by main controller, scanning board and display control device. Main controller firstly captures data of all colors' brightness in one particular screen image from the display adapter, then to distribute the data to the scanning boards. Each scanning board takes charge of certain rows of the LED display and the LED display control signal in each row can be transmitted in serial mode. Currently, there are two serial modes to transmit display control signal. One way is to make centralized control of each pixel's grey scale in the scanning board. More detailed steps: the scanning board analyzes the data of each row of pixel received from the controller (PWM process), then the board will transmit the open signal of each row to corresponding LED light, controlling each LED to be lit on or to keep off state. The signal is transmitted in serial mode and in the form of pulse (the pulse signal will be 1 if it indicates LED to turn on, contrary, the signal will be 0). The device used in this method is less, but the data amount being transmitted is comparatively larger. In every relighting cycle, the grey scale level is in direct ratio with its pulse amount for each pixel, that is to say, 16 grey scale levels need 16 pulses and 256 grey scale levels need 256 pulses. As in LED display, the working frequency for the devices is limited, only 16 grey scale levels is achieved generally. 3. The serial transmitting content for the scanning board is not the on or off signals of each LED, but an eight-bit binary brightness value. If every LED has its distinct PWM to control its lighting time, a pixel under 16 grey scale levels need only 4 pulses and 256 grey scale levels need only 8 pulses in one relighting cycle, reducing serial transmission frequency greatly. Through this grey scale decentralized control method, 256 grey scale levels control can be achieved easily.

LED Encapsulation Process

Encapsulation is generally adopted in packaging of lamp-LEDs. The encapsulation procedure is to pour liquid epoxy into the LED moulding chamber first, and then insert the LED bracket that has undergone the press welding, then put the mould into the oven, and the LED gets shaped when the epoxy solidifies.

The procedure of encapsulation sounds rather simple, while the following points should be paid attention to:

1. To fit the die bars onto the aluminium ship in a certain direction, drift the dust, and then put the mould into the 125°C oven for 40 minutes for warm-up.
2. Prepare the required quantity of epoxy, put the epoxy into the 45°C oven for 15min for defoaming.
3. Pour the epoxy into the mould, pre-bake the mould (3ϕ to 5ϕ products at 125°C for 60 minutes; 8ϕ to 10ϕ products at 110°C for 30 minutes and then at 125°C for 30 minutes)
4. Release the product from the mould, bake at 125°C for 6 to 8 hours.

If the encapsulation process is not properly conducted, the following are possible results:

1. Bracket inclined to one side, inserted too deep or too shallow, upside down, stained with epoxy, yellowed (oxidation, high baking temperature or long baking time)
2. Air bubbles in bowl shape, pearl shape, thread shape, or pinhole bubbles on the surface
3. Impurity, excess epoxy, insufficient epoxy, nebulization
4. Water mark on the epoxy surface, damage or crack of epoxy (aging glue or wrong ratio), yellowed epoxy (excessive ratio of A glue)

There are two major packing houses in China, King Bright and Nation Star. These two companies are the principal suppliers of the LED device components to the module manufacturers.