ONE WORLD LED

LED DESIGN, MANUFACTURE & WHOLESALE

- One World LED Architecture - Flash Module Array Systems & V-Commerce
- Daktronics, Video Display Control System

LED Architecture Primer

PRIMER ON

DIGITAL SIGNAGE AND VIRTUAL COMMERCE ARCHITECTURES

Introduction

With less than three percent market penetration and double digit annual growth, the out of home LED displays present fantastic opportunities for enhancing the commercial presentation of every advance metropolis. This also presents phenomenal business opportunities for leading businesses to take advantage of these innovations to secure and expand their market share. The key question confronting businesses, developers, consultants and architects is which architectural platform provides the best solution today as well as cost effective flexibility for adoptions and incorporation of future innovations that are bound to revolutionize the world of commerce and e-commerce as we know it today.

This paper compares the two leading architectural platforms for LED display systems and future Virtual Commerce.

Overview

Today's LED display Systems are based on either the American (Daktronics) or the Chinese (One World) architectural platforms. These architectural platforms are based on innovations patented in their respective countries. These innovations are outlined in the following patent families:

> *Daktronics* – as disclosed in US Patents US6819303 B1 and US7646357 B2 for Electronic Sign Control System. A centralized solution to LED display image transmission. These innovations outline how the images on host hard disk drives are transferred and displayed on LED screens.
>
> *One World* – as disclosed in Chinese patents ZL200710171787.8 (Flash Module Array Systems), ZL201010234704.7 (Flash Cluster device), ZL 201110082382.3 (Method and System of Data Transmitting and Displaying) and others. A set of innovations for moving from E-Commerce to V-commerce incorporating large out of home smart displays for communication with users which includes bidirectional online and offline transmission and display of information and multimedia files.

This paper reviews and compares these two architectures for design and development of large LED screens used in current applications as well as future Virtual Commerce.

Daktronics Innovations and American Digital Sign Architecture

This architecture is primarily is described in the US Patent applications US6819303 B1 filed August 17, 1998 and US7646357 B2 filed May 14, 2004. Following is the Abstract of the Daktronics US patent 7,646,357 B2 entitled "Control System for an Electronic Sign (Video Display System)".

Daktronics system architecture consists of the following major subsystems,

- A Microsoft Windows NT Serve/workstation with PC slots and RS232 ports
  - Equipped with image capture card and other peripherals
- A Venus 7000 controller system
- A VMAX 3 Transmitter Card
- A V-Link video signal hub and switch
- A Data Distributor with receiver and output cards

These subsystems are shown in a diagram compiled from patent drawings in Figure 1 below.

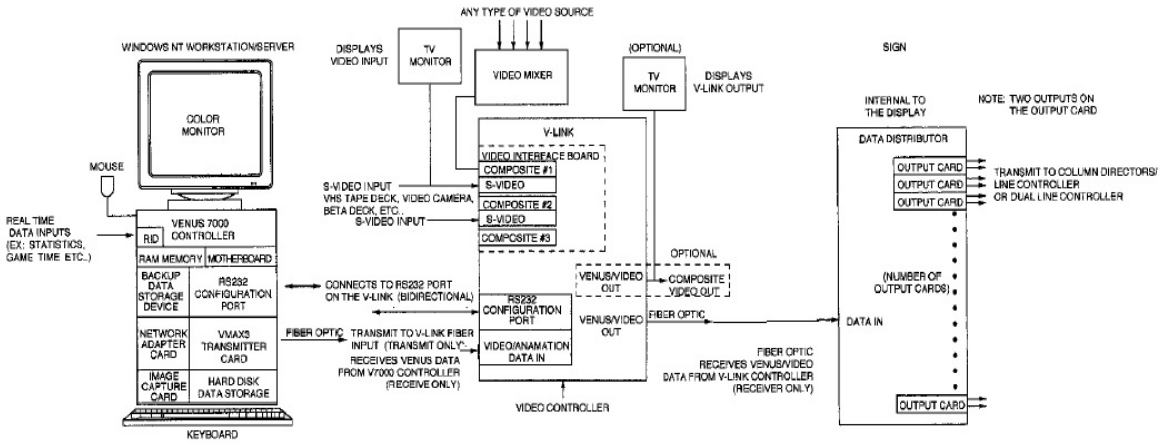

Figure 1 - Major Daktronics System Architecture Blocks

The primary function of this Daktronics invention is described in their US patent abstracts. Primary Daktronics patent abstract describes their architecture as shown below.

(10) **Patent No.: US 6,819,303 B1**

(57) **ABSTRACT**

A video display system including an electronic sign, a electronic sign control system utilizing a general purpose personal computer, having a video interface card, controlled by clock and command signals from said personal computer, containing a plurality of video and digital input ports and a high speed output port, a transmitter link control card, also under the control of clock and command signals from said personal computer, for transmitting video display, clock, and command signals to a remote data receiver and distributor associated with the electronic sign, which converts said signals into device control signals for controlling individual sign display elements.

Abstract of Daktronics Control System Invention

As descried above, Daktronics claims to have invented a complete “video display system” inclusive of a general purpose computer having a video interface card controlled by the clock and command signals from the said computer”. This “general purpose” computer is further described as including a number of subsystems for input and output.

These disclosures place an emphasis on the “clock and command control signals from this personal computer” for driving and controlling the other subsystems of Daktronics display system. Certain elements of these subsystems are critical to these Daktronics disclosures which include video interface card, high speed output port, a transmitter link control card, a data receiver card and a distributor associated with the “electronic sign”.

The computer system of the said Daktronics patents is shown as Figure 2 in both patents being reviewed here and reproduced below for closer examination. This figure 1 diagrams the major subsystems of Daktronics invention which are generally subordinated to a Venus 7000 Controller. This system is an X86 platform server running Microsoft Windows NT, additionally equipped with a Video graphics card, a video capture card, a Daktronics VMAX3 transmitter card with direct communication with a V-Link II video processor and video interface boards.

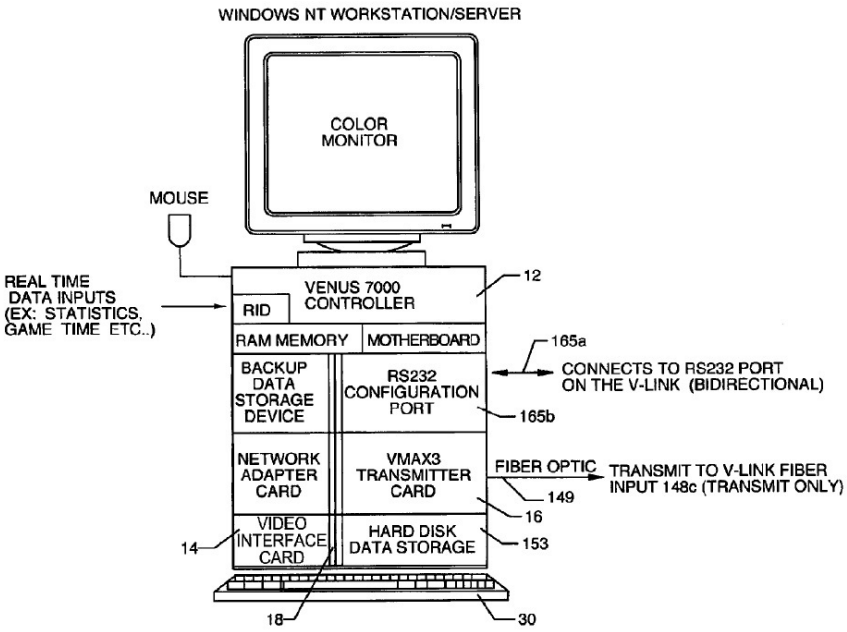

Figure 2 - Daktronics Patents US6819303 and US7646357 Fig. 1

Daktronics Venus V7000 controller allows the operation of a sign by using a program. This program which directs various data and images to V-Link for transmission to the Data Distributor which in turn will format the final output by the configuration of the Display modules and pixels before placing them onto the correct Column Director and Line Controller at the coordinated clock signal.

The primary source of the images and text is the Venus 7000 system network or storage devices. Additional video may be directed from various sources supported by the V-Link for mixing before sending to Data Distributor. The V-Link optionally supports a TV Monitor for viewing the output locally by operators as it is being transmitted to the display.

Daktronics Data Distributor is a key component of American display architecture and consists of a Fiberoptic video input (receive only) from the V-Link and a number of Output Cards each dedicated to driving signals to a number of pixel columns on display modules (LEDs) to create the corresponding section of images displayed.

The architectural flow diagram for the control system outlines the logic and process of the image and data from various sources through the subsystems of Daktronics invention for final integration and rendering onto the display screen. The detailed description of these flow diagrams can be found in the original US patent 7646357 B2. The complete Daktronics control system flow diagram is shown in Figure 3 below.

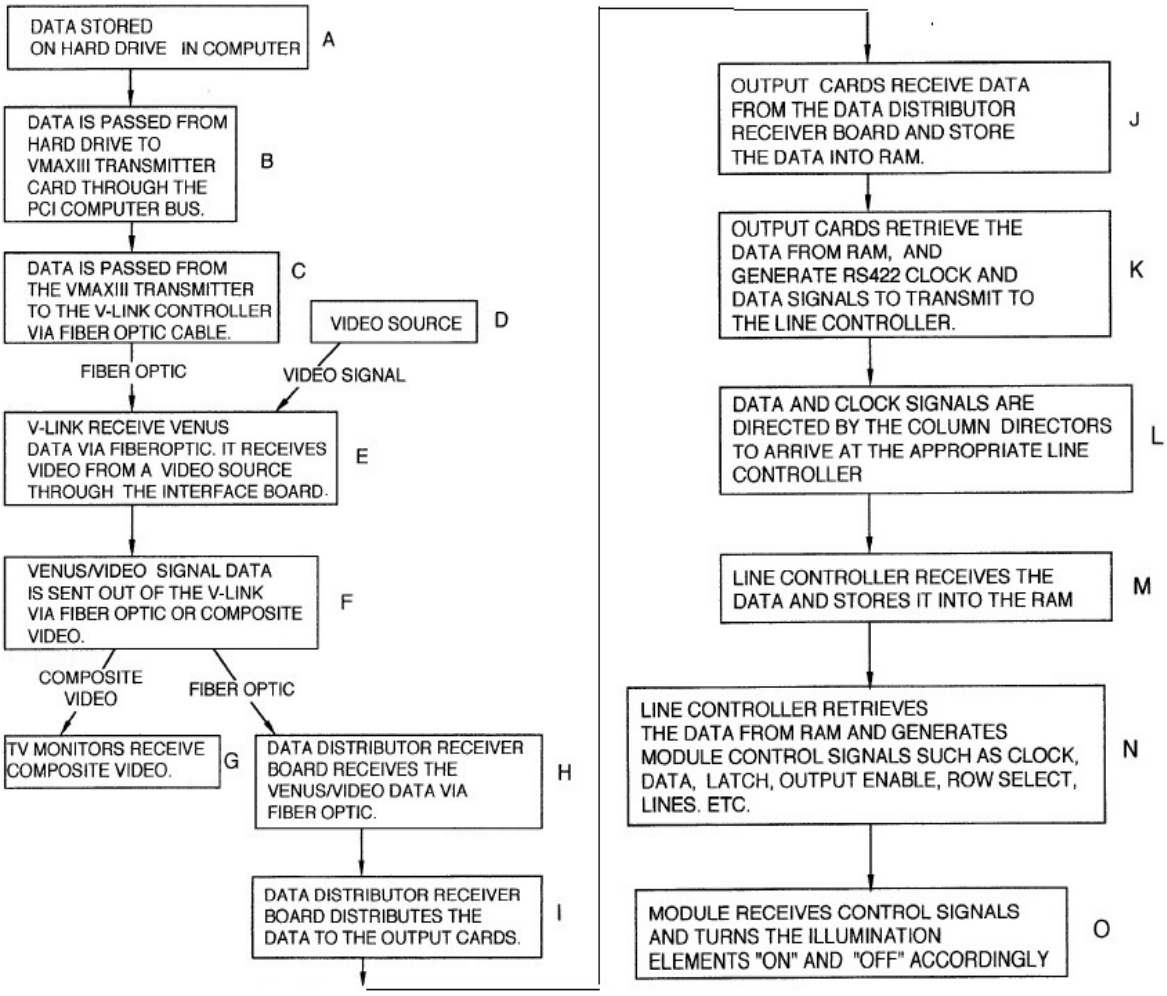

Figure 3 - Daktronics Control System Architecture Flow Diagram

Daktronics architecture which is the foundation of many sports scoreboards and replay displays as well as numerous western arenas, airports and billboard venues consists of the following subsystems.

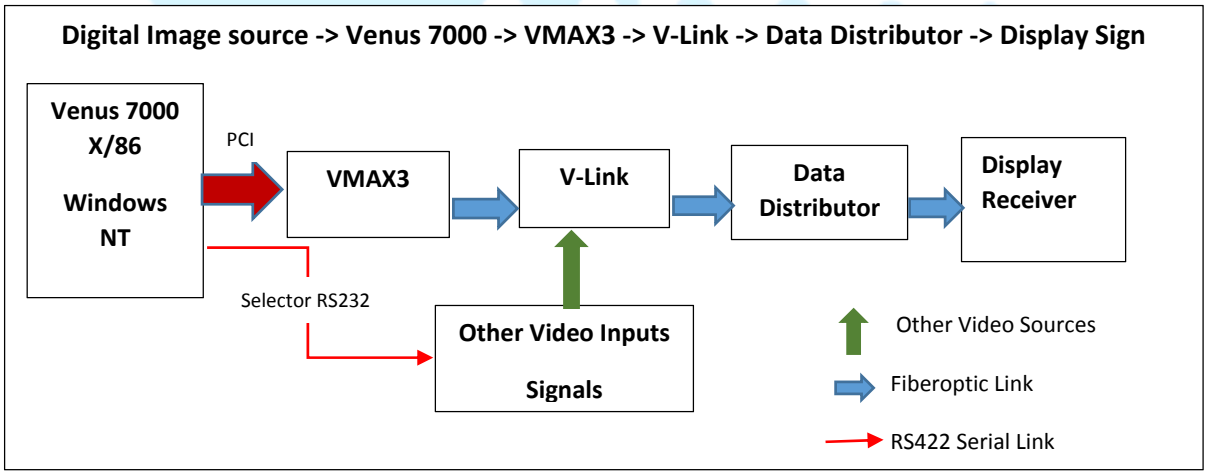

Figure 4 - Block Diagram of Daktronics Electronic Sign Controller Architecture

This general architecture is not new and similar architectures have previously been used with LCD matrix panels for similar applications. However, the lack of brightness and image continuity had limited LCD's applications to mostly indoor and semi-outdoor. See Weitek, SCALA and many others offerings for similar applications. Figure 18 of the Daktronics US7646357 reproduced below, as Figure 5, diagrams the Data Distributor's relationship with the LED Display modules.

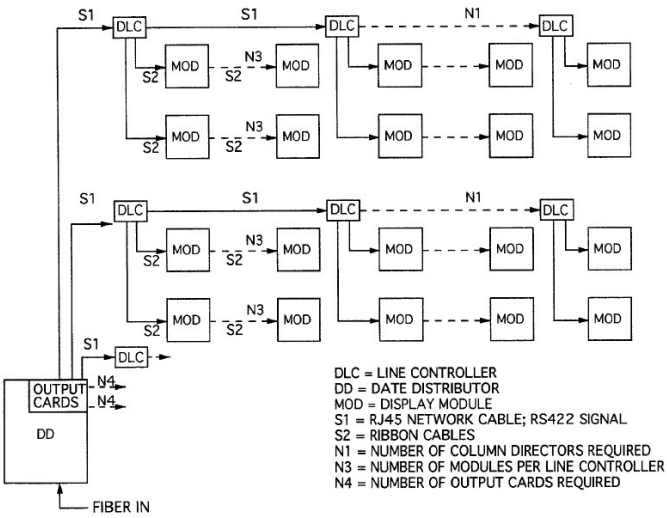

Figure 5 - Diagram of Daktronics's Data Distributor & LED Display Screen

However, it is important to note that Daktronics inventions were intended to achieve a specific objective. These objectives are listed in Column 3 of their primary patent application US 6,819,903 B1, "Summary of The Invention" section and are provided in abbreviated form for reference below:

1. To provide an improved remote controller for an electronic sign
2. To provide a PC-based remote controller for electronic sign
3. To provide a remote controller with ability to select from a variety of video input and data, to combine selected inputs into a single composite digital and transmit to a remote sign
4. To provide a remote controller with ability to combine selected inputs into a single composite digital and transmit to a remote sign over high speed fiberoptic cable
5. Same as 4 above and where signal is received, buffered and distributed to individual display elements of the electronic sign
6. Same as 5 above and in accordance with a command signal representing the type of electronic sign being controlled
7. The Venus 7000 having the ability to communicate with V-Link through a standard COM port of the PC

Daktronics has achieved these objectives by developing various subsystems to address each part. These subsystems include Venus 7000 Server/workstation running Microsoft NT operating system on an X/86 PC platform, a VMAX3 PCI-based transmitter card, a V-Link controller and video interface subsystem, a Data Distributor and electronic sign receiving cards. Following is a brief description of the key elements of Daktronics electronic sign control system architecture.

- Venus 7000 (or any successor products such as VNET or DMP8000 functioning as host)
    - X/86 PC-Based Server/workstation
    - Microsoft NT operating system
    - PCI slots to support other subsystems like VMAX3

    - RS232 COM ports for selection and coordination commands
- VMAX3 PCI-based transmitter card (or successor products such as VMAX4, etc.)
    - High speed data output
    - X/86, PCI slot, Windows based driver
    - Receives data from Venus 7000
    - Supports parallel to serial converter for High Speed transmission
    - Fiberoptic transmission port to V-Link
- V-Link II controller and video interface subsystem – (or successor like VIP4060)
    - Fiberoptic input port to receive from VMAX3
    - Serial port to receive commands from Venus 7000
    - Allows Venus 7000 select video source
    - Allows Venus 7000 Data overlay
    - V-Link II buffers Venus data and video
    - Transmits to Data Distributor
    - Can overlap animation from Venus on digital video input
- Data Distributor (or successor products built into displays like RLR, PLR & PLC)
    - Houses two type of cards, receiver board and Output cards
    - Receives display configuration data from Venus 7000
    - Receiver Board
        - On-board microprocessor
        - Contains a programmable logic device
        - Supports Fiberoptic input port
        - Must have at least one Output Card
        - Contains Flash memory, FIFO and EPROM
        - Control program stored on Flash
        - Typically located inside the display
        - On power up microprocessor programs programmable Logic Device
    - Output Card
        - Proprietary electrical connection to data bus of Receiver Board
        - Has a 16 position rotary switch to select address of the card
        - Display technology component of VMAX3
        - Must be associated with one Receiver Board
        - Located inside the display
        - Contains RAM for buffering
        - Transmits at 30 frames/second rate
        - Two separate data outputs each with 4 parallel output ports
- Electronic Sign Receivers at Display
    - Dual Line Controller
    - Column Director
        - Inside the display
        - Contains a programmable logic device
        - One input and two outputs each with two signals (Data and Clock)
    - Line Controller
- LED Display Modules

As an architecture, this platform is simply an evolution from indoor LCD matrix displays to outdoor LED signs. All the elements of PC-based video selection, mixing, processing and transmission had

existed before Daktronics invention and this architecture combined all the existing prior art to produce a solution primarily intended for upgrading sports venue scoreboards and entertainment.

In summary, the American electronic sign control systems architecture has the following capabilities,

- Utilizes the X/86 PC platform and architecture
- Relies on Microsoft operating systems and services
- Addresses video and data delivery to large audiences in various venues
- Allows selection of video and data from multiple sources
- Utilizes a combination of serial communication interfaces (for commands and coordination)
- Requires active management (operators) for proper real-time operation and control

And its weaknesses include:

- Architecture is evolutionary
- Architecture is limited in scope to prior art subsystems capabilities
- Architecture is dependent on prior art hardware and software platforms for acquisition, processing and transmission
- Architecture addresses advertising and informing (unidirectional) of audience
- No transaction processing or audience interaction provision
- Hardware X/86 architecture dependent
- Microsoft OS-Dependent
- Electronic display is assumed to be a wired-in output only device
- Display incorporates proprietary module and communication design
- Architecture depends on specific methods and types of communication and devices
- Architecture relies on multiple communication media (Serial RS232, RS422, Fiberoptic) for data and command (Status) signals (unreliable and expensive)
- Architecture hardwires specific and proprietary subsystems (dependence and limitations)
- Too many limitations such as RS232 and fiberoptic (Data and Control) lines

Some of the other software and hardware products that complement the display systems for advertising and display contents management are briefly covered here for completeness sake.

Exhibit 1 is one of the many sources available that re-iterates the American digital advertising architecture platform. This exhibit includes the diagrams including the one reproduced below as Figure 6 that confirms the one way architecture.

Figure 6 - American Digital Display Advertising Architecture Block Diagram (Weitek)

Exhibit 2 is another outline of digital advertising and display signs and its architectural overview from one of the many sources available on the web. This and other sources confirm what we have covered in this section.

Exhibit 3 briefly reproduces the SCALA display management software architecture for creating, managing and displaying contents one way to the displays screens. This confirms the limitations of the architecture to providing information to the market for advertising. This management system architecture proves that digital display and its contents architecture is strictly limited to automating

the traditional paper and print billboard advertising and had not contemplated any provisions for transaction and commerce.

Exhibit 4 provides overview of Intel Media player product for digital displays. This product is Intel's media player especially designed for the digital display market and configured to serve its market needs.

Exhibit 5 provides key highlights of the Cisco digital signs and display products which include web-based media and contents management tools for advertising and information publishing.

Daktronics LED Display Architecture Summary

The American Daktronics architecture for centralized one way LED display control system addresses the advertising and sports venues needs with active operations management[1].

This architecture has severe limitations and cannot address the long-term virtual commerce requirements. The inclusion of detailed PC design for the various subsystems shows that the invention was registered as a system innovation after it was put together rather than starting with a logical framework for a new visual systems architecture. Additionally, reference to specific devices and components[2] to teach the innovation methods demonstrates the narrow focus of the invention as getting images and data to a new type of display (LED) rather than advancing the methods of interacting with users by innovation.

Utilizing multiple links and interfaces to communicate the commands and videos shows reliance on existing off-the-shelf products from over a decade ago to achieve simple objectives which barely meets the threshold of today's standards.

While a good attempt was made to offload certain processing overhead from Venus to VMAX3, V-Link and Data Distributor, the control and management of ultimate display contents are located centrally at Venus. This weakness has locked this architecture out of the option of using distributed and array processing innovations and other technological advances of the past two decades.

The evolutionary development path of American LED Display architecture from its scoreboard roots and its incorporation to newer products primarily used in sports venues show little potential for future adoption. This is due to lack of flexibility and feature benefits that tops the lists of requirements for advancing and evolving business and commercial applications. The low duty-cycle and cost effectiveness of solutions based on this architectural platform have made it less attractive in comparison with more advanced solutions available on the global markets.

---

[1] For Daktronics- see the following links for more details;

- http://www.google.com.na/patents/US7646357 Primary Patent describing current design and architecture.
- http://www.daktronics.com/en-us/support/document-index
- http://www.daktronics.com/Web%20Documents/Transportation-Documents/2013-2014-Airports-and-Parking-Facilities-Catalog.pdf

[2] The fact that more recently these system have incorporated Cat5 and Cat6 wiring demonstrates the adaptation in time with changing technologies to take advantage of more cost effective methods. However utilizing the Fiber to Cat5 converters at either end of the lines to adapts back to the patented invention shows both lacking innovations and dangers of resorting to specific products and components to achieve patent examiner's teaching and innovation requirements.

Finally, the patents that include specific circuit diagrams, communication protocols, devices and or platforms are very limited in scope and capability. Major corporations and experienced inventors do not file applications with hundreds of figures that lack simply explainable innovations.

One World Innovations – A Quantum Leap Forward

This architecture represents a quantum leap forward from the American architecture described in the previous section. Chinese LED design architecture is primarily based on the Flash Module Array Systems which simply moves the data block addressing from the host computer to the display controller.

This architecture is based on significantly more advanced innovations that cover numerous current and future technologies. These technologies are primarily based on Flash Module Array Systems and support numerous other visualization and virtualization inventions. The key innovations are patented primarily by One World Technology and Colorlight as listed below.

- **ZL200710171787.8 (FMAS), Synchronous and Asynchronous Smart Display Systems Operations**
  - Multi-media, Image and data files can be sent to smart displays incorporating Flash Module Arrays and upgradeable control programs to manage the displays and other user I/O devices.
- **ZL200710171786.3 (Flash Wear-out Avoid), Increasing reliability and life-expectancy of Flash modules**
  - Can automatically replace Flash blocks before getting worn out for long-term use in outdoor FMAS display control system.
- **ZL200810037133.0 (Restrictive Flash Partitioning),**
- **ZL201010234704.7 (Flash Cluster Method for Flash Module Arrays)**
  - Allow multiple FMAS control systems to cooperate in addressing very large storage, communication and display problems.
- **ZL 201110082382.3 (Multiparty Method and System of Data Transmitting and Displaying)**
  - Teaches a multi-party, multi-platform Virtual Commerce for automation of local and global marketing, advertising and commerce incorporating state of the art systems and innovations in all related disciplines.
- **ZL201320499670.3 (Synchronization Control System of Flash Module Array based LED Display Screen)**
  - Synchronous and Asynchronous control program for FMAS Controller
  - Coordination of Flash Module Array Control program with the host using a standard communication interface
  - Mapping method for image blocks to a matrix of pixels of LED modules on display screen
- **201320499670.3 (LED Display Unit Panel and LED Screen)**
  - Field Programmable Logic Array based FMAS
  - Cascade of FMAS controllers
  - Coordination of Cascaded Flash Module Array Block Mapping Units for LED displays
  - Automatic switch to Asynchronous (FMAS Control) upon detecting communication/host failures
- **ZL201320745853.9 (LED Display Screen Array of Control Devices)**
  - FMAS Controllers comprised of control unit, processor, flash memory, Standard I/O interfaces
  - FMAS Control program communication and coordination with a system sender
  - Block Mapping of the image pixels to the LED light Matrix on the modules upstream to FMAS
  - Communication for cooperation amongst FMAS modules in Array format
- **Many other Patented and patent pending innovations**
  - **VCB, Smart Wallet, Dealcodes,** NAPA, etc.

One World VI-Commerce Innovation Strategy

The Virtually Intelligent Commerce or VI-Commerce is a quantum leap advancement that upgrades electronic displays and devices into fully capable virtual intelligence commerce subsystems.

One World envisions a three-stage evolution of intelligent commerce resulting from advances of technology and incorporation of state-of-the-art into commerce. See figure 7 below.

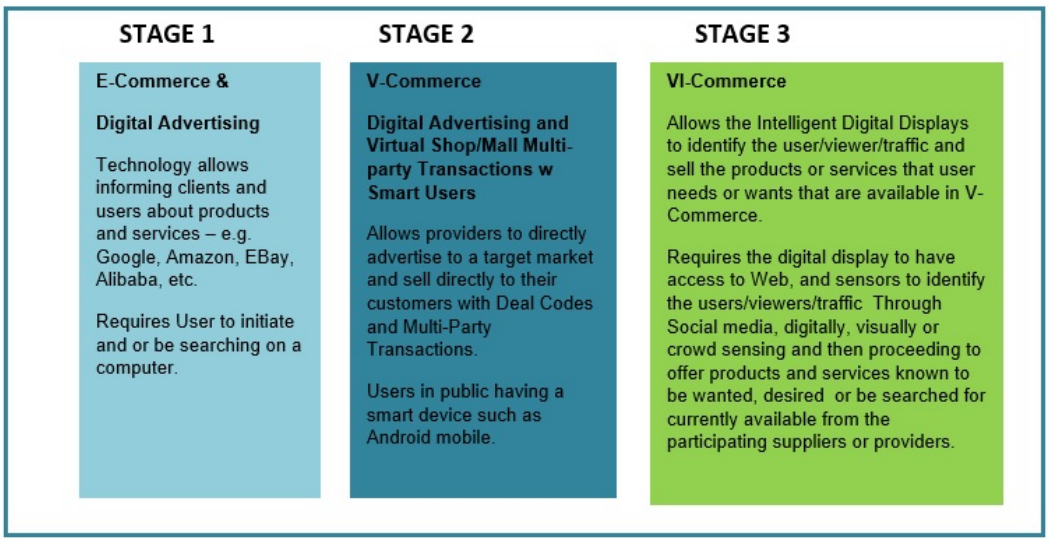

Figure 7 - Three Phases or Stages of V-Commerce Development

Our goal is to invent all the necessary tools and methods that make this vision a reality. Consequently, this document described the solutions that advance the technology from Stage 1 to Stage 2 outlined above and to solve the key problems for moving from Stage 2 to Stage 3.

Currently, the world of technology is operating in the E-commerce stage: where the users view advertising and are encouraged to remember the products, services and or providers for future selection and transactions using the online or off-line shopping methods in a two-party e-commerce transaction.

Our innovations create an architectural platform for all the parties to engage in commerce at any level and fully utilize the technologies to provide products and services, present products and services as intermediaries or agents, and procure products and services as consumers or agents. This model is outlined in a simplified diagram of Figure 8 below.

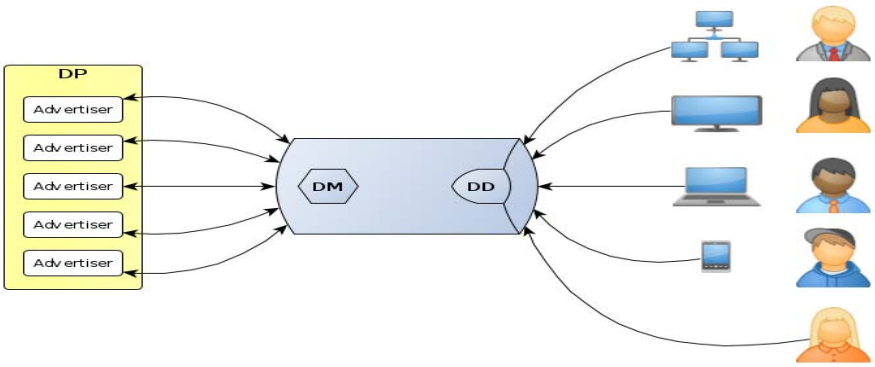

Figure 8 - Multi-party VCB incorporating Adverpost, IPAM, Deal Codes and Smart Wallet

Data Providers (DPs) are advertisers, distributors, or suppliers of products and or services. Data Manager or DM is the controller of media and or the systems that offer or transact the products and/or servicers offered by DPs. The DDs are the Data Display platforms which act as electronic stores, shopping centres or malls. Lastly, DUs are the Data Users of the platform or customers that procure the products or services they wish to know about, receive information or coupons, or transact upon.

Data Display (DD) Systems Architecture

The One World architectural platform is significantly wider in scope than Daktronics' one way display control system. In fact, we only need to compare a small part of that architecture with its American counterpart, i.e. the Data Display (DD) component. Please note that the DD component itself teaches a two way virtual commerce display component which, also includes displaying codes and communicating with the DUs can interact with the display for shopping, coupon collection and other real-time transactions. The display itself can broadcast code and information for interacting and data collection with other FMAS devices which are beyond the scope of this evaluation.

Flash Module Array Control Systems Architecture

It would be cost prohibitive if not impossible to implement very large high resolution LED display screens for displaying images and videos using the Daktronics architecture. The software for mapping and driving billions of pixels in each of thousands of frames per second, using 24 bit grey scale, would be beyond the capacity provided by most powerful centralized graphic control systems. See the 4,080 square meter New Century Universal Center LED screen's picture below. The design and installations of large LED screens are made possible by Flash Module Array System invention.

Figure 9 - 4,080M² LED, New Century Universal Centre, Chengdu, China (Novastar)

Before Flash Module Array Systems innovations by One World, LED control systems simply redirected the video output of the host computers to signal splitters which divided the signals into multiple groups and redirected them to LED driver modules in order to manage the groups of image pixels for driving groups of LED signals. This and other centralized prior art LED display solutions were the result of LED front panel indicators, number displays and scoreboard display evolution. These schemes introduce delays and other limitations due to buffering and central processing (Host-based address mapping and communication) which create synchronization problems with the host produced sounds for multi-media file types and videos, not to mention real-time incompatibilities.

One World solved these and many other problems by inventing Flash Module Array Systems which moves the address mapping function from the host processor to the controller. Figure 5 shows the block diagram of the FMAS teaching.

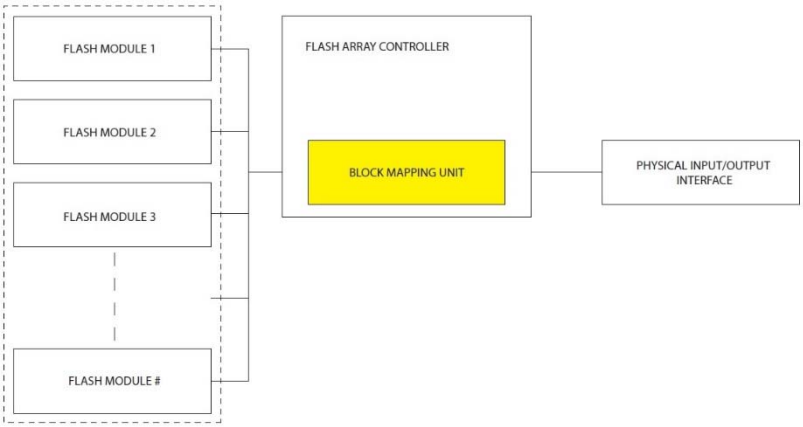

Figure 10 - Flash Module Array System of One World Tech Patent Figure 1

This invention allowed the images (each frame) to be divided into smaller manageable chunks called blocks. The image to be displayed is then divided into blocks and each block is mapped or processed by a dedicated Flash (-based) Module also called “receiving card” or “controller”. Each Flash receiving card module would map only one of the blocks that makes up the image to be displayed in a coordination with other controllers in the array to create LED screen’s seamless display of images in online (Synchronous) or offline (Asynchronous) mode. Flash Module Arrays are equipped with standard interfaces through which they communicate with each other and the “upstream devices”, in this case LED modules.

This invention offers a quantum leap advance and significant advantages over the prior art methods of using host-based mapping. The prior art, host-based mapping is the basis of the existing LCD monitor controllers and drivers along with signal splitting techniques use by older LED display and sports scoreboard manufacturers. With this technique, rather than reprocessing the signals intended for another output display device, allows direct image and other contents processing by the LED Screen control system while freeing host resources for other concurrent operations with the LED display. FMAS controllers have significantly expanded the limits of the prior art for LED Screen design including single host processing limitation for each LED display. Very large LED screens impossible to design in prior art are now common place producing stunning shows and amazing crowds and visitors in landmark events and venues. See examples below.

See Exhibit 6 for an explanation of Prior art and advance to Block Mapping Unit innovation of FMAS.

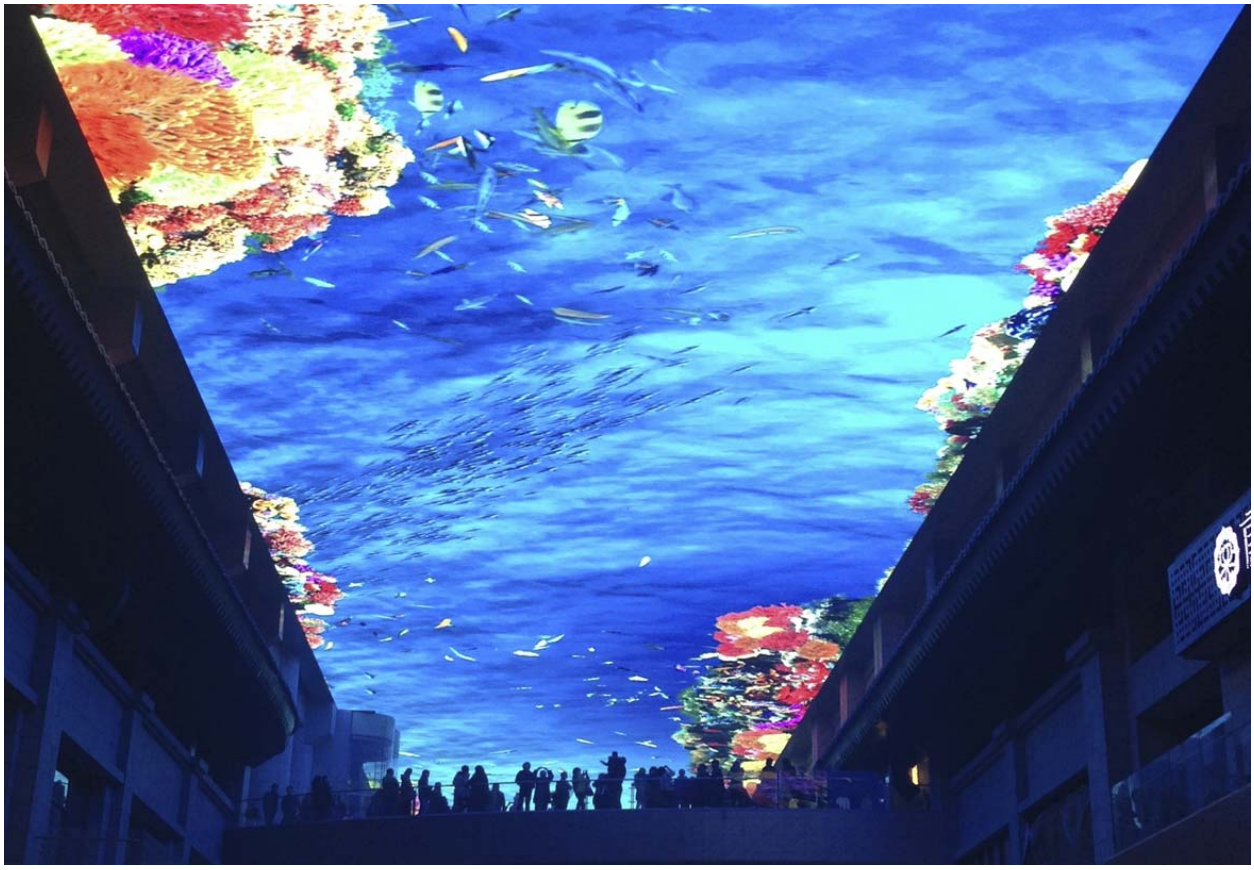

Figure 11 - Sky Screen 3,024 M², Xian China, Courtesy (by NovaStar)

Another invention that has been instrumental in simplifying the LED control systems and reducing their implementation cost is disclosed in Colorlight's Sender method which eliminated the "sending cards" or the host-based interface and controller. This invention, in conjunction with Software Control Panel (which teaches how to setup, Configure, and update Block Mapping Unit (BMU) of the Flash Module Array Systems) complete this quantum leap advance in the design of the LED Control Systems.

Some of the advantages of this architecture are as follows:

- Distributed control, synchronous, asynchronous and dual modes
    - Operates display signs with or without a host computer
- Platforms independent (hardware, firmware and software)
    - No X/86, Microsoft or any other hardware/software platform dependence
- No dependence on any unique technology, product or component
    - Communication and processing can utilize any standard meeting the needs
- True open architecture for development
    - Use any mixer or digital format application may require
- No limitation in terms of power, capacity or bandwidth
- Open to incorporation of all technology advances in related fields
- Minimum components and subsystems to implement
- Utilizing off-the-shelf subsystems
- Low cost and high reliability
- Cross industry application

The FMAS is a true architectural innovation which is equally applicable in other fields of technology such as storage and communication. Much like advances in other fields of science and technology, any architectural innovation should have fundamental impact and move the field a quantum leap forward. This is what FMAS and its related innovations contribute to Electronic Display designs and advancing e-commerce to v-commerce.

Following is one embodiment of the FMAS as an array of Receiving Cards (R/C) for managing nine (9) LED display cabinets as a long LED display screen. This embodiment depicts such applications are perimeter LED display screens for sports arenas. Figure 12 shows a 1X9 FMAS based configuration.

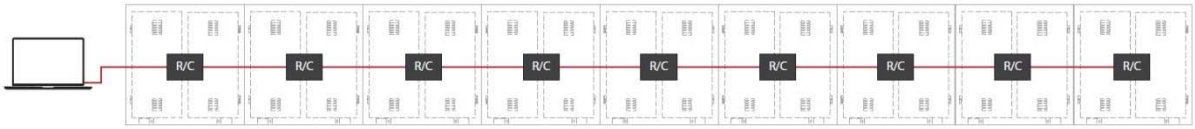

Figure 12 - An Embodiment of FMAS Controller Cards as a Long Display Screen

The same display cabinets may be organized as shown below to form a 3X3 billboard.

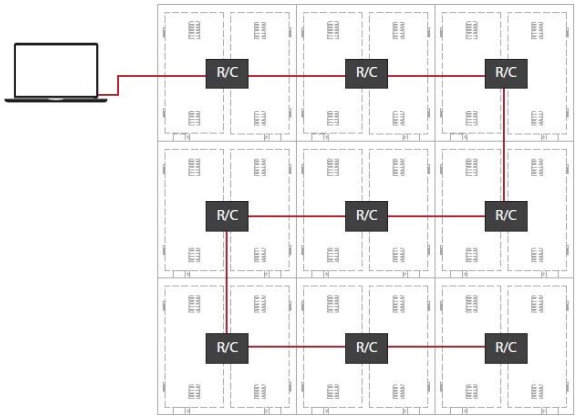

Figure 13 - Another Embodiment of the FMAS of Previous Diagram

These examples show how the versatility of the FMAS Architecture can have the same P10 modules and cabinets be rearranged to construct various display types to meet many applications. In comparison, the alternative prior art architecture requires development of a different display for each application depending on the size and parameters of the display screen, its modules and Data Distributor geometry, lacking versatility, flexibility and standardization.

Software Control Panel Innovation

This invention allows setup and updating of the Block Mapping Unit for one or more Flash Module Array Systems. While this invention solves the key problem of how one or more FMAS can be setup and used in a varying application environment, such as updating multiple Mobile Phones used by sales team members, updating antenna arrays controllers for cellular communication or FMAS used in IP-Cameras to search for a particular object, car or person. Its primary application today is in programming, configuring and driving LED Control Systems incorporating FMAS design and architecture.

Following block diagram shows the subsystems of a Software Control Panel in relation with multiple FMAS configuration. See Figure 14.

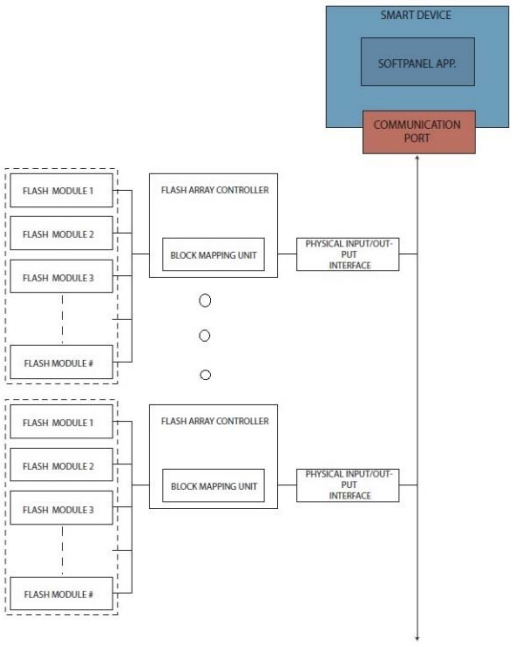

Figure 14 - FMAS and Soft Control Panel Diagram

A typical block diagram of FMAS control system of a large LED display consisting of 9 cabinets follows.

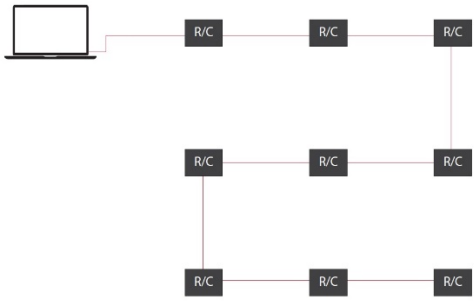

Figure 15 - Cascade of FMAS Control Cards with a Soft Control Panel Computer

Following is a typical application of this architecture in a data wiring diagram of an FMAS-based LED control systems. Figure 16 diagrams the LED management software in the laptop incorporates Software Control Panel invention and the Colorlight's "No Sending Card" Invention for setup, control

and operation of the FMAS Display screen control system. This FMAS configuration consists of nine (9) Flash Module Array System controllers (receiving cards) for a typical LED screen with 9 cabinets.

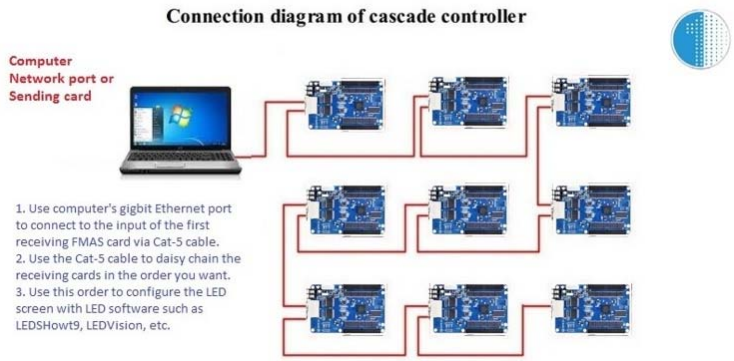

Figure 16 - Typical LED Display Control System[3] Using a Software Control Panel

Colorlight inventions have advanced the architecture of Block Mapping Unit. These inventions include:

- **ZL201320499670.3 (Synchronization Control System of Flash Module Array based LED Display Screen)**
- **201320499670.3 (LED Display Unit Panel and LED Screen)**
- **ZL201320745853.9 (LED Display Screen Array of Control Devices)**
- **And other innovations including T9 Sender (used in LEDVision and LEDshowT9)**

These inventions have advanced the Block mapping unit functions and methods for interfacing with Flash Module Arrays in cascade configurations. One key advancement is the detection of systems and communication faults and automatic fall-back to local (offline or Asynchronous) control of the display. This is an important advance that was contemplated by FMAS and FMAS Cascading inventions of One World.

In particular, ZL201320499670 teaches development software control of FMAS control system by eliminating the Sending Card. This invention has allowed expansion of FMAS block mapping unit functionality. These functions include not only communication with the host systems for reprogramming and updating the FMAS which is implemented using Field Programmable Logic Array (FPGA) and the Flash Memory Module Array, but also cooperation with other FMAS units in cascaded configuration locally. This allows automatic dual mode operation of control FMAS.

This has facilitated the offline operation of the LED display should the control system in the array detect any disruption in the communication or in the host operations. This is termed Asynchronous operation of the Display control system (as opposed to Synchronous where the host sends frames of the images to the display's FMAS or Cascaded FMAS for local mapping to LED modules). This asynchronous operation allows the screen to continue to display the latest advertising loop in case of host, internet or communication disruptions.

Colorlight's T9 sender service invention eliminates the need for host-based sending cards. This technology facilitates the architecture of platform independence for implementation of LED display control systems. This advance allows implementation of smart displays for V-Commerce and is a significant development.

[3] Diagram shows a cascade of 9 Colorlight's RT9 receiving cards that do not require a sending card and use FMAS and Soft Control Panel architecture.

Chinese LED Displays and Virtual Commerce Architectural Platform

This paper focuses on comparing the two dominant LED Display Architectures from Daktronics of America versus One World of China. It is important to note that while the former represents the pinnacle of evolution from LED scoreboards the latter represents the initial stage of the digital display in V-Commerce. That is the displays based on Daktronics architecture can be used, at best, for sports venue displays and advertising billboards, which is the least one would expect from the displays based on One World's architecture. This means not only will the cost factors be significantly in favour One World displays, but also the applications and return on investment makes them the obvious choice for any current and future application, including the V-Commerce.

The V-Commerce platform simply refers to a set of innovations and technologies that advances the E-commerce form a single user business transaction initiated by user to a full commercial environment where multiparty transactions can be initiated by users or businesses and organizations anywhere in the world with built-in Forex in an international and multilingual settings.

Conclusions

The review of the two leading architectural platforms for LED Display Systems has shown vast superiority of the Chinese architecture and the quantum leap forward it represents. Their supporting innovation and development environment have demonstrated conclusively that while the American/Daktronics inventions have advanced digital scoreboards for sport venues, the Chinese architectural platform has rapidly emerged as the solution of choice for advertising, commerce and entertainment. The promise of future adaptability and applications/service support for integration of these advanced marketing, sales and commerce tools are to be fully realized by the rich Chinese architecture.

The evolutionary development path of American LED Display architectural platform from its scoreboard roots show little or no potential for long-term adoption. This is due to high costs, of implementation, overhead, and a lack of flexibility for advanced features/benefits that tops the lists of requirements for evolving commercial applications. The attributes of high duty cycle, high reliability, availability and cost effectiveness of solutions based on Chinese architectural platform have made it most attractive in comparison with less advanced solutions of the past.

The key question for businesses, developers, consultants and architects is which innovation platform provides the best solution for today and tomorrow. This review of alternatives provides necessary information for deciding the parameters that drive the choice decisions for these experts. The cost effectiveness, flexibility for adoptions and incorporation of future innovations that are bound to revolutionize the world of commerce and e-commerce as we know it today, usually tops these experts lists. We hope the information provided here leads to the correct roadmap for proper evaluation of these two platforms and answers the key questions.

Exhibits

Exhibit 1 - Digital Signage Architecture

WeiTek's digital signage solution is the X86-based open-platform architecture, which is compatible with various digital signage software for customers to edit, schedule and publish content easily. There are two product categories in our digital signage solutions: network player and all-in-one digital signage computer.

The following system architecture diagram is designed to show how different platforms could work to deliver High-Definition content to interact with your customers.

Digital Signage Network Player

The WDSP series is compact BOX PC ideal for space critical applications.

This embedded hardware platform is based on a 3.5" industrial SBC which supports x86 Processor and is compatible with various digital signage software to conduct content editing, scheduling and content publishing. The compact size, noiseless operation and advanced network connectivity makes the WDSP series highly suited to a wide range of digital signage applications and can be easily managed at any time any place.

System Architecture

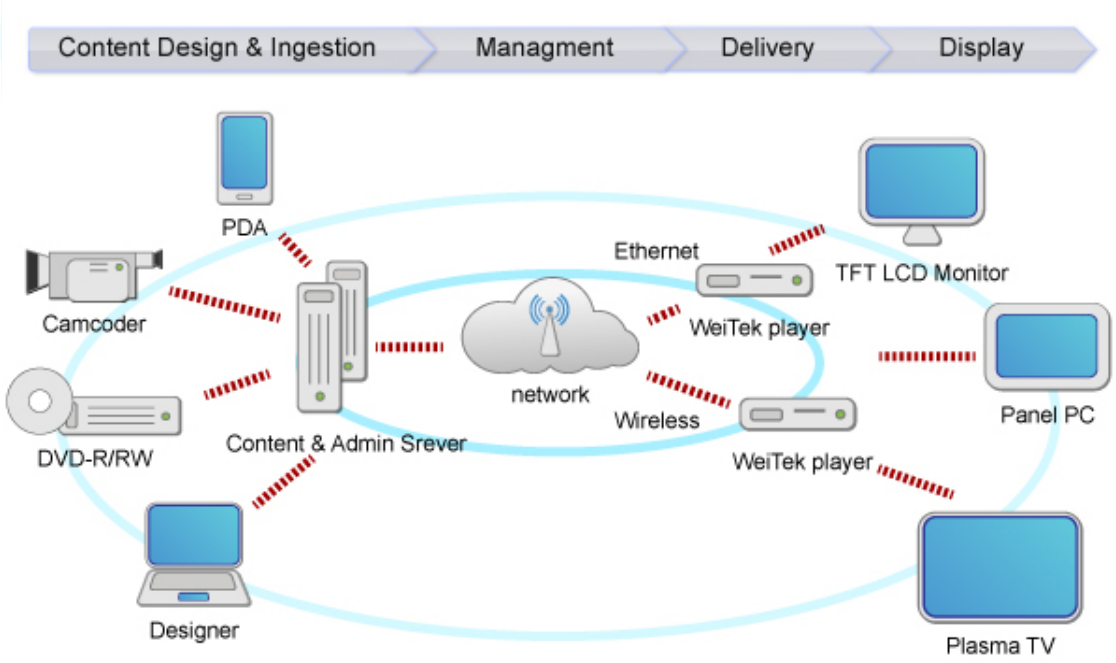

Source: WeiTek

Exhibit 2 – Digital Signage Architecture

Source: https://www.semiconductorstore.com/pages/Promo_Landing/2011/SemiStore_DigitalSignage_promo.asp

Digital Signage

Digital signage is a method of electronically displaying advertising or other information. Digital signage is also sometimes called dynamic signage or digital out of home, abbreviated as DOOH. Often times the content is displayed in places located remotely from the source of the information, such as in public or private places for informational and advertising purposes. The messages delivered can be displayed at specific times. Digital signage is used: in retail stores, fast food restaurants, schools, libraries, office buildings, medical facilities, airports, train and bus stations, banks, auto dealerships and other venues.

There are several advantages for using digital signs instead of printed signs. Digital signs can be quickly updated anytime from a remote location, while printed signs require physical replacement and require someone to travel to each sign location. Examples where Digital signage is used environmentally friendly because they do not create any material waste such as paint or paper. Digital signs can be animated and can deliver multimedia content such as sound and visual content. The data on the screen can be updated in real time by means of an Internet or VPN intranet network connection. The information is often times compressed to minimize the amount of data required to send over a network. The decoder and display system of large screens may include multiple tiled cabinets. In this case intelligent decoder hardware is required for stitching together the large image across multiple displays.

System Architecture

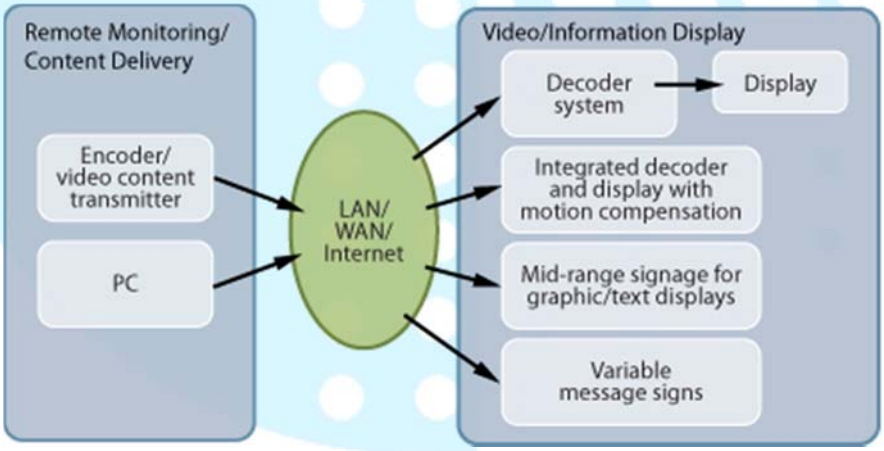

Exhibit 3 – Scala

SCALA - DIGITAL SIGNAGE SOLUTIONS

Scala's digital signage software creates, manages, and distributes digital content to networks of digital displays that are centrally managed and addressable for targeted information, entertainment, merchandising, and advertising. Scala is at the forefront of the high-impact medium of electronic digital signage displays.

Digital signage is used for a wide variety of purposes including customer facing and employee facing applications such as advertising, enhancing customer or employee experiences, influencing audience behavior, brand building, entertainment, security, interactive kiosks, creating corporate communities, etc. Deployments can be found in such diverse locations as retail outlets, transit hubs, doctor's offices, fast food restaurants, corporate campuses, sports venues and even gas service stations.

Scala offers a range of products at distinctive price points to suit the unique requirements of different customers. All Scala products have been rigorously tested to ensure unsurpassed reliability. Additionally, optional Scala services (like training, programming, graphic design, cloud and platform integration services) are available to provide a complete solution and optimize the user experience.

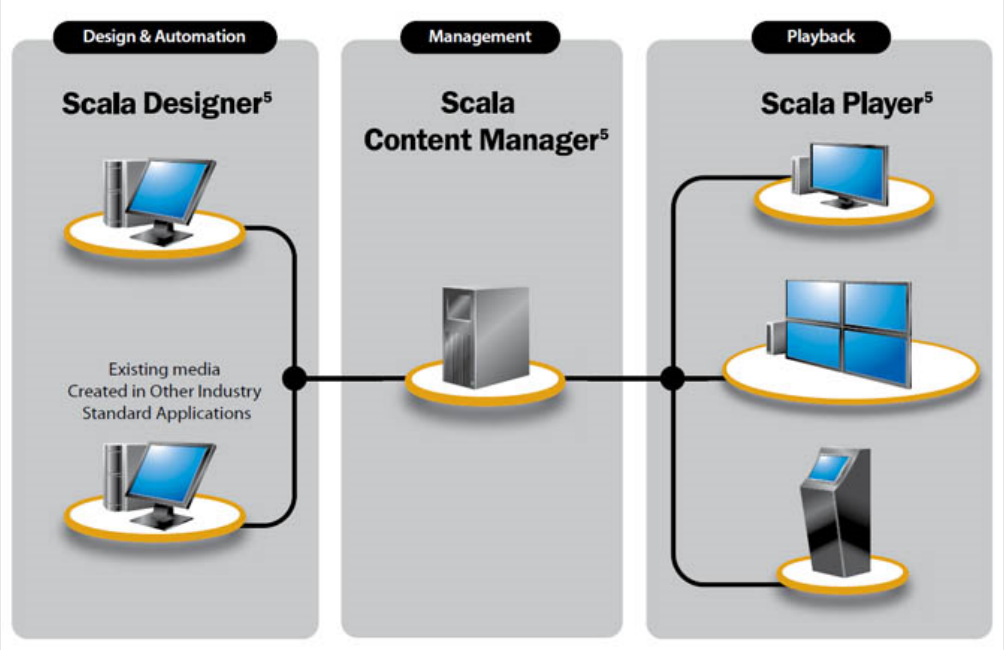

Source: SCALA

Exhibit 4 – Intel Display Media Player

http://www.intel.com/content/www/us/en/intelligent-systems/digital-signage/digital-signage-eval-kit-12-brief.html

	Compa ct	Compact	1U: I/O Superset	1U: Graphics Card
Intel® Processor	Intel® Core™2 Duo Processor	Intel® Core™2 Duo Processor	Intel Core 2 Duo	Intel Core 2 Duo
Independent Display	1-2	1-2	1-2	1-4
Board Dimensions	EPIC (165x115mm)			
Chassis Dimensions	185x125x30mm		265x165x50mm	265x175x60mm
Memory: Dual SODIMM	Up to 8 GB DDR			
I/O Ports	4 x USB		6 x USB	
	2 x SATA 1 x DVI-I 1 x HDMI 1 x RJ45 Line-in/Line-out/Mic-in PCI Express* x4 slot			
			2 x COM Compact Flash slot	
WiMAX and WiFi	Intel® WiMAX/WiFi Link wireless network adapters			
Modules	IR Rem			
Optional Modules			3G module—Mini card 12V DC Out	
			TV Tuner (Plugs into PCI Express slot)	S3 Graphic Card with 1 x DVI, 1 x HDMI (Plugs into PCI

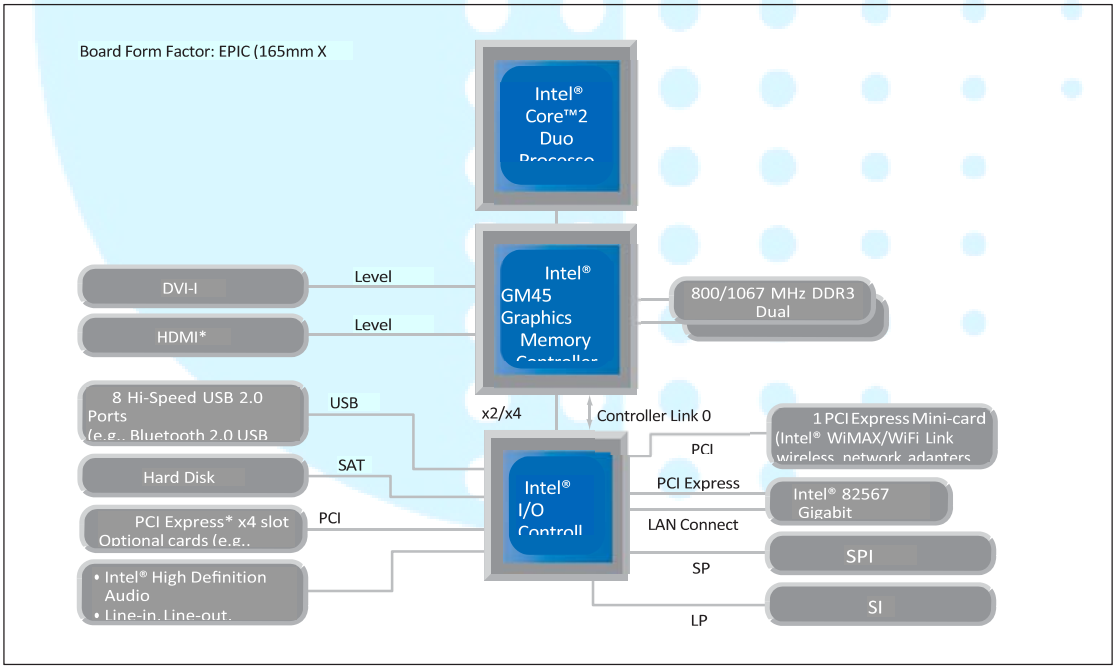

Figure 2. Block Diagram of Intel® Core™2 Duo Processor-Based System

Exhibit 5 –Cisco Digital Media Technology

Cisco - Manage and Publish Digital Media (Source: Cisco.com)

Manage, schedule, and publish digital media with Cisco Digital Media Manager, the central management application for all Cisco Digital Media Suite products. This web-based media management application works with:

- Cisco Digital Signs
- Cisco Cast
- Cisco Show and Share

With Cisco Digital Media Manager, content managers can:

- Manage content assets and create playlists for Cisco Digital Signs and Cisco Show and Share
- Schedule instant and future content deployments and playback for Cisco Digital Signs, Cisco Cast, and Cisco Show and Share
- Report on playback schedules for Cisco Digital Signs and on video usage for Cisco Show and Share
- Manage Q&A for live Cisco Show and Share broadcasts
- Synchronize slides for both live and video on demand Cisco Show and Share events

Content designers can:

- Customize signage screen layouts and zones for Cisco Digital Signs
- Customize and brand Cisco Cast skins and menus
- Customize and brand the interface for Cisco Show and Share

IT users can:

- Manage user accounts for role-based access control and configure user-specific content restrictions for desktop video users
- Configure and manage Cisco Digital Media Encoders for Cisco Show and Share
- Remotely configure, manage, and monitor Cisco Digital Signs networks
- Manage event-based alerts and server appliances

Also see Cisco Digital Signs webpage excerpt below.

http://www.cisco.com/web/solutions/dms/digital-signs_aag.html

Digital Signs: At a Glance

Digital signs are a dynamic way to effectively and affordably communicate in the 21st century.

Maybe you've seen in-store monitors displaying compelling point-of-sale offers, or read the latest school news on a large LCD in the campus cafeteria. Perhaps you have learned about attractive new investments while standing in line at your bank. If so, you've experienced the power of digital signs.

With digital signs, organizations of all types can instantly deliver high-impact messages to targeted audiences using the Internet Protocol (IP) network they already have.

What are Digital Signs?

Digital signs are high-resolution monitors displaying messages, promotional offers, news updates, video, graphics, and other content. The displays are located in public areas such as stores, elevators, lobbies, bank or financial institution branches, and schools. You may also see them in offices, meeting rooms and other locations within businesses. The content is created and transmitted to displays through a networked digital signage solution.

Multiple Uses for Digital Signage

Digital signs can be used for many different purposes, including:

- **Marketing and Promotions:** Retailers can promote new products and services directly to customers at the point of sale, at the checkout line, or other areas within stores.
- **Enhancing the Customer Experience:** Deliver entertaining, useful information to customers, which helps reduce perceived wait times.
- **Communications and Training:** Broadcast real-time executive and internal communications, providing training and company news to employees throughout an organization.
- **Information:** Cost-effectively share up-to-date schedules, news, and emergency alerts where people need them most.
- **Advertising:** Sell screen time to third-party advertisers.

Website Link and Excerpt Highlighting Cisco's Digital Media Tools and Products

Exhibit 6 – Control Units of Prior Art

Host Architecture and Block Mapping Unit of FMAS

In prior art, one expert in the art of System Architecture would immediately recognize that "Unit" has been primarily used to refer to key subsystems of the host processor. See below.

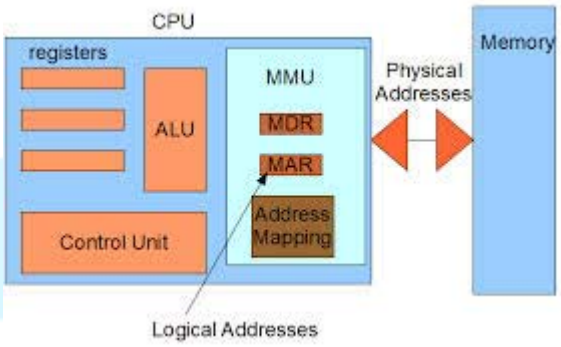

Basic Architecture of the Central Processors (Source: K-State.edu[4])

These key components consisted of CPU (Central Processing Unit), ALU (Arithmetic and Logic Unit) and MMU (Memory Management Unit) and the FPU (Floating Point Unit). Of these three key "Units", the MMU function has always been "Address Mapping". See figure above.

Recently the systems with limited address space supporting larger memory than available to direct addressing, have referred to "Mapping" as "Remapping" as the final memory location may be outside the low memory addresses. See Intel[5] and AMD[6] Architecture specifications.

While memory address space is commonly divided into "Pages" for MMU the peripherals address space is commonly divided into "Blocks" for allocation and manipulation.

So, it would only make sense for the prior art's address mapping functions moved from the Host Processor Units to other subsystems' Controller be called "Block Mapping Unit". In effect, FMAS accepts bulk data and handles local detailed distribution to the upstream devices locally, thus relieving the CPU from handling mass storage and mass display address mapping and transfer problem resolutions. This is a quantum leap advance in systems architecture.

[4] See link: http://faculty.salina.k-state.edu/tim/ossg/Memory/mem_hw.html

[5] See http://www.intel.com.au/content/dam/www/public/us/en/documents/product-specifications/vt-directed-io-spec.pdf

[6] See AMD link at: http://developer.amd.com/wordpress/media/2012/10/48882.pdf